福卡斯型闭式含时变系数的 Sobolev 型方程的解公式

Andreas Chatziafratis

雅典国立卡波迪斯特里亚大学应用分析与偏微分方程分部、数学系

2025年12月17日

摘要。 我们通过解析方法，为一大类具有一般时变系数的 Sobolev-Galpern 型演化偏微分方程的非齐次初边值问题，推导出新颖的显式积分表示。这些方程满足适当的温和条件，且数据可属于经典函数空间中的任意数据。本研究以审慎实施开创性的 Fokas 统一变换方法为基础，同时采用其近期提出的扩展方法，以求解一类具有特定多项式型色散关系和时变系数的线性演化方程。本文有效地将这些技术扩展至一组特殊的、具有时变系数和时空混合导数的演化方程；这类导数会引出有理色散关系。我们通过一系列示例，详细展示了如何为半直线上的多种此类方程（如 Milne-Taylor-Barenblatt-Coleman-Ting-Chen 型、Benjamin-Bona-Mahony 型以及众多高阶变体）构造闭式解。由于存在混合导数项，自然会出现复杂的复解析和代数技术难题；针对每种情形，我们都妥善解决了这些难题。这些新公式也有助于后续研究定性性质，并分析其非线性对应问题。关于进一步扩展、推广、严格性方面的问题，以及将这些方法应用于其他类型问题的工作，也将在即将发表的论文中报告。

1. 引言

下文将讨论定义在半直线上的一类含混合导数的偏微分方程（Sobolev-Galpern 型 [1]）的初边值问题（IBVP）。这些方程具有一般的时变系数和数据，并在适当的温和假设下进行研究。

我们的研究遵循开创性的 Fokas 统一变换方法（参见例如 [2-9]）。部分灵感源自 Kalimeris 和 Özsarı 在近期工作中提出的一个精彩见解；他们在 [10], 指明了前进方向，从而能够以简单而优雅的方式，为某些具有时变系数的“多项式型”演化偏微分方程构造统一变换法类型的解公式。[10] 也很好地阐述了研究具有这类系数的偏微分方程的动机。（值得一提的是，[11-14] 也通过 Fokas 方法研究了具有空间变系数的线性偏微分方程问题。）

本文将把上述方法和思路拓展到一个全新的重要方向。更具体地说，我们将研究如下形式的方程

$$\mathcal{P}u = f(x,t),$$

其中 是以下微分算子之一:

1. $\partial_t - \alpha(t)\partial_{xxt} - \beta(t)\partial_{xx} + \gamma(t)$,
2. $\partial_t - \alpha\partial_{xxt} + \beta(t)\partial_x$,
3. $\partial_t + \alpha(t)\partial_{xxxxt} + \beta(t)\partial_{xxxx} + \gamma(t)$,
4. $\partial_t + \alpha\partial_{xxxxt} - \beta(t)\partial_{xx}$,
5. $\partial_t + \alpha\partial_{xxxxt} - \beta\partial_{xxt} + \gamma(t)\partial_{xxxx}$,
6. $\partial_t + \alpha\partial_{xxxxt} - \beta\partial_{xxt} - \gamma(t)\partial_x$,
7. $\partial_t - \alpha\partial_{xxxxxxt} + \beta\partial_{xxxxt} - \gamma\partial_{xxt} - \delta(t)\partial_{xx}$,
8. $\partial_t - \alpha(t)\partial_{xxxxxxt} - \beta(t)\partial_{xxxxxx} + \gamma(t)$,
9. $\partial_t + (-1)^{\nu}\alpha(t)\partial_x^{2\nu}\partial_t + (-1)^{\nu}\beta(t)\partial_x^{2\nu} + \gamma(t)$, $\nu \in \mathbb{N}$.

电子邮箱地址： chatziafrati@math.uoa.gr

由我们的演示可揭示出一种一般模式，最终涉及一大类相关问题。这类偏微分方程和初边值问题已与应用科学和工程学诸多领域中的重要应用相关联，预计还将在固体力学、流体动力学、热质传递、材料科学、生物学、数理金融、土壤物理学和纳米技术等领域发现更多实际应用价值。

作为说明，我们注意到，仅1st 算子情形（即使将系数替换为常数，并删去反应项和强迫项）也对应于著名的“伪抛物”模型。该模型至关重要，在大量应用数学、连续介质力学和数理物理文献中受到了广泛关注。更具体地说，这类线性伪抛物方程已经被推导或提出，并从不同角度进行了研究，例如见[15-35]。然而，针对时变系数情形的精确解公式似乎从未得到系统提出。

进一步的严格论证、定性理论、渐近分析、可控性、针对非标准问题的推广，以及在非线性对应问题分析中的应用，将另行发表。

记号与假设 我们将使用半直线傅里叶变换的标准记号。因此，对于 $\lambda \in \mathbb{C}$ 且 $0 \text{Im}\lambda \leq$ ，定义

$$\hat{u} = \hat{u}(\lambda, t) = \int_{y=0}^{\infty} u(y,t) e^{-i\lambda y} dy \quad \text{and} \quad \hat{f}(\lambda, t) = \int_{y=0}^{\infty} f(y,t) e^{-i\lambda y} dy .$$

全文中，我们对数据作如下假设:

$$u_0(x) \in \mathcal{S}([0,\infty)),\ g_0(t), g_1(t), g_2(t), \ldots \in C^{\infty}([0,\infty)) \ \text{and}$$

$$f = f(x,t) \in C^{\infty}(\overline{\mathbb{R}^+ \times \mathbb{R}^+}) \ \text{such that} \ f(\cdot, t) \in \mathcal{S}([0,\infty)).$$

更确切地说，关于函数 $),(txf$ 的最后一项假设意味着：该函数关于x快速衰减，且对紧子集 $),[0 +\infty$ ，中的 t 一致；也就是说，对任意 $\}\ell \in \mathbb{N} \cup 0$ {、n和 $_0 > 0t$ ，

$$\sup\left\{ x^{\ell} \left| \frac{\partial^n f(x,t)}{\partial x^n} \right| : x \geq 0, 0 \leq t \leq t_0 \right\} < +\infty .$$

此外，我们用以下记号表示未知函数 $),(txu$ 的 $-x$ 导数的边界值:

$$g_0(t) = u(0,t),\ g_1(t) = u_x(0,t),\ g_2(t) = u_{xx}(0,t), \ldots .$$

根据具体问题的不同，上述函数 $)(tg_j$ 要么是数据的一部分，要么是待定未知量，需在构造解的过程中确定。

按照惯例，推导从假设我们有该具体问题的一个解 $),(txu$ 开始；该解具有适当的性质，从而使推导步骤和构造计算均有依据。

关于系数 $)(),(tt$ α β 、$)(t\gamma$ .....，假设它们属于 $^{\infty}C$，其中 $),\in[0 +\infty t$ ，使得

$$\alpha(t) > 0 \text{, for every } t \in [0, +\infty) \text{ and } \sup\{\alpha(t) : t \geq 0\} < +\infty .$$

根据具体问题，可能还需要施加进一步的限制。例如，在第2节中，w e
假设 $0)(\neq t\beta$ 。在第6节中，我们假设 $)(t\alpha$ 和 $)(t\beta$ 为常数。此外，还需要满足某些相容条件。例如，在第2节中，我们假设 $)= 0 ()0(00 gu$。

2. The operator $\partial_t - \alpha(t)\partial_{xxt} - \beta(t)\partial_{xx} + \gamma(t)$

问题 ***1*** 求解

$$\begin{cases} \partial_t u = \alpha(t)\partial_{xxt} u + \beta(t)\partial_{xx} u - \gamma(t)u + f(x,t), \ (x,t) \in \mathbb{R}^+ \times \mathbb{R}^+, \\ u(x,0) = u_0(x), \ x \in \mathbb{R}^+, \\ u(0,t) = g_0(t), \ t \in \mathbb{R}^+, \end{cases} \tag{2.1}$$

对于),(交
易单元.

解的推导 对 $\lambda \in$ ， $\lambda \le 0$Im 进行处理，并取傅里叶变换，式（2.1）中的微分方程给出

$$\frac{\partial}{\partial t}[\hat{u}(\lambda,t)] = \alpha(t)\frac{\partial}{\partial t}\left[\int_0^\infty \frac{\partial^2 u(y,t)}{\partial y^2} e^{-i\lambda y} dy\right] + \beta(t)\int_0^\infty \frac{\partial^2 u(y,t)}{\partial y^2} e^{-i\lambda y} dy - \gamma(t)\int_0^\infty u(y,t) e^{-i\lambda y} dy, \tag{2.2}$$

因为

$$\hat{u}_t = \hat{u}_t(\lambda,t) = \frac{\partial \hat{u}(\lambda,t)}{\partial t} = \int_{y=0}^\infty \frac{\partial u(y,t)}{\partial t} e^{-i\lambda y} dy .$$

此外,

$$\int_0^\infty u_x(x,t) e^{-i\lambda x} dx = -g_0(t) + i\lambda \hat{u}(\lambda,t) \text{ and } \int_0^\infty u_{xx}(x,t) e^{-i\lambda x} dx = -g_1(t) - i\lambda g_0(t) + (i\lambda)^2 \hat{u}(\lambda,t),$$

其中我们设定),= $_x$ 0 ()(1 *tutg*，因此，在 (2.2) 中进行分部积分后，得到:

$$[1+\alpha(t)\lambda^2]\frac{\partial}{\partial t}[\hat{u}(\lambda,t)] + [\beta(t)\lambda^2 + \gamma(t)]\hat{u}(\lambda,t) = -\alpha(t)[g_1'(t) + i\lambda g_0'(t)] - \beta(t)[g_1(t) + i\lambda g_0(t)] + \hat{f}(\lambda,t),$$

since $\frac{\partial}{\partial t}[u_x(0,t)] = g_1'(t)$.

因此,

$$\frac{\partial}{\partial t}[\hat{u}(\lambda,t)] + \frac{\beta(t)\lambda^2 + \gamma(t)}{1+\alpha(t)\lambda^2}\hat{u}(\lambda,t) = -\frac{1}{1+\alpha(t)\lambda^2}\{\alpha(t)[g_1'(t) + i\lambda g_0'(t)] + \beta(t)[g_1(t) + i\lambda g_0(t)]\} + \frac{\hat{f}(\lambda,t)}{1+\alpha(t)\lambda^2}. \tag{2.3}$$

设

$$\omega(\lambda,t) = \frac{\beta(t)\lambda^2 + \gamma(t)}{1+\alpha(t)\lambda^2} \text{ and } \Omega(\lambda,t) = \int_{\tau=0}^t \omega(\lambda,\tau)d\tau = \int_{\tau=0}^t \frac{\beta(\tau)\lambda^2 + \gamma(\tau)}{1+\alpha(\tau)\lambda^2} d\tau ,$$

我们看到——这对接下来的内容至关重要——

$$\omega(-\lambda,t) = \omega(\lambda,t), \ \Omega(-\lambda,t) = \Omega(\lambda,t), \tag{2.4}$$

and

$$\lim_{\substack{\lambda\to\infty \\ \lambda\in\mathbb{C}-i\mathbb{R}}} \Omega(\lambda,t) = \int_{\tau=0}^t \frac{\beta(\tau)}{\alpha(\tau)} d\tau \text{ , uniformly for } t \text{ in compact subsets of } [0,+\infty).$$

此外，由上述关系可知，对于每个 $> 0T$ 以及半直线 }:{:),[$_0$ $+\infty$ $= \eta$ $\eta \ge$ $_0$ *ciiic* 的每个邻域 A ，其中 = 1 、 α ≥ 0 $> 0\sqrt{< +\infty}$}}:)(/inf{:$_0$ \ *tt* *c* ，

$$\sup\{\left|e^{\pm\Omega(\lambda,t)}\right| : 0 \le t \le T, \ \lambda \in \mathbb{C} - \mathrm{A} \ \textit{and} \ \mathrm{Im}\lambda \ge 0\} < +\infty . \tag{2.5}$$

由于

$$\frac{\partial}{\partial t}[e^{\Omega(\lambda,t)}\hat{u}(\lambda,t)]=e^{\Omega(\lambda,t)}\frac{\partial}{\partial t}[\hat{u}(\lambda,t)]+e^{\Omega(\lambda,t)}\frac{\beta(t)\lambda^2+\gamma(t)}{1+\alpha(t)\lambda^2}\hat{u}(\lambda,t),$$

我们可以将（2.3）写成如下形式:

$$\frac{\partial}{\partial t}[e^{\Omega(\lambda,t)}\hat{u}(\lambda,t)]=-\frac{e^{\Omega(\lambda,t)}}{1+\alpha(t)\lambda^2}\{\alpha(t)[g_1'(t)+i\lambda g_0'(t)]+\beta(t)[g_1(t)+i\lambda g_0(t)]\}+\frac{e^{\Omega(\lambda,t)}}{1+\alpha(t)\lambda^2}\hat{f}(\lambda,t).$$

对上述方程积分，得到

$$e^{\Omega(\lambda,t)}\hat{u}(\lambda,t)=\hat{u}_0(\lambda)-\int_{\tau=0}^{t}\frac{e^{\Omega(\lambda,\tau)}}{1+\alpha(\tau)\lambda^2}\left\{\alpha(\tau)[g_1'(\tau)+i\lambda g_0'(\tau)]+\beta(\tau)[g_1(\tau)+i\lambda g_0(\tau)]-\hat{f}(\lambda,\tau)\right\}d\tau,$$

或者等价地 valently,

$$\hat{u}(\lambda,t)=e^{-\Omega(\lambda,t)}\hat{u}_0(\lambda)-e^{-\Omega(\lambda,t)}\int_{\tau=0}^{t}\frac{e^{\Omega(\lambda,\tau)}}{1+\alpha(\tau)\lambda^2}[\alpha(\tau)g_1'(\tau)+\beta(\tau)g_1(\tau)]\,d\tau \tag{2.6}$$

$$-e^{-\Omega(\lambda,t)}\int_{\tau=0}^{t}\frac{e^{\Omega(\lambda,\tau)}}{1+\alpha(\tau)\lambda^2}\left\{i\lambda[\alpha(\tau)g_0'(\tau)+\beta(\tau)g_0(\tau)]-\hat{f}(\lambda,\tau)\right\}d\tau\text{ , for }\lambda\in\mathbb{C}\text{ with }\mathrm{Im}\lambda\le 0.$$

根据（2.4），在（2.6）中用 $-\lambda$ 代替 λ，可得

$$\hat{u}(-\lambda,t)=e^{-\Omega(\lambda,t)}\hat{u}_0(-\lambda)-e^{-\Omega(\lambda,t)}\int_{\tau=0}^{t}\frac{e^{\Omega(\lambda,\tau)}}{1+\alpha(\tau)\lambda^2}[\alpha(\tau)g_1'(\tau)+\beta(\tau)g_1(\tau)]\,d\tau \tag{2.7}$$

$$-e^{-\Omega(\lambda,t)}\int_{\tau=0}^{t}\frac{e^{\Omega(\lambda,\tau)}}{1+\alpha(\tau)\lambda^2}\left\{-i\lambda[\alpha(\tau)g_0'(\tau)+\beta(\tau)g_0(\tau)]-\hat{f}(-\lambda,\tau)\right\}d\tau\text{ , for }\lambda\in\mathbb{C}\text{ with }\mathrm{Im}\lambda\ge 0.$$

将（2.6）乘以 xie^{λ}，并对 λ 积分，得到

$$2\pi u(x,t)=\int_{-\infty}^{\infty}e^{i\lambda x}\hat{u}(\lambda,t)d\lambda \tag{2.8}$$

$$=\int_{-\infty}^{\infty}e^{i\lambda x-\Omega(\lambda,t)}\hat{u}_0(\lambda)d\lambda-\int_{-\infty}^{\infty}\left\{e^{i\lambda x-\Omega(\lambda,t)}\int_{\tau=0}^{t}\frac{e^{\Omega(\lambda,\tau)}}{1+\alpha(\tau)\lambda^2}[\alpha(\tau)g_1'(\tau)+\beta(\tau)g_1(\tau)]\,d\tau\right\}d\lambda$$

$$-\int_{-\infty}^{\infty}\left\{i\lambda e^{i\lambda x-\Omega(\lambda,t)}\int_{\tau=0}^{t}\frac{e^{\Omega(\lambda,\tau)}}{1+\alpha(\tau)\lambda^2}[\alpha(\tau)g_0'(\tau)+\beta(\tau)g_0(\tau)]\,d\tau\right\}d\lambda+\int_{-\infty}^{\infty}\left\{e^{i\lambda x-\Omega(\lambda,t)}\int_{\tau=0}^{t}\frac{e^{\Omega(\lambda,\tau)}}{1+\alpha(\tau)\lambda^2}\hat{f}(\lambda,\tau)\,d\tau\right\}d\lambda.$$

利用 (2.5)，并变形涉及以下量的 λ $-d$ 积分的积分路径

$$\alpha(\tau)g_1'(\tau)+\beta(\tau)g_1(\tau),\ \alpha(\tau)g_1'(\tau)+\beta(\tau)g_1(\tau),$$

我们将 (2.8) 写成如下形式:

$$2\pi u(x,t)=\int_{-\infty}^{\infty}e^{i\lambda x}\hat{u}(\lambda,t)d\lambda \tag{2.8}$$

$$=\int_{-\infty}^{\infty}e^{i\lambda x-\Omega(\lambda,t)}\hat{u}_0(\lambda)d\lambda-\int_{\mathcal{L}}\left\{e^{i\lambda x-\Omega(\lambda,t)}\int_{\tau=0}^{t}\frac{e^{\Omega(\lambda,\tau)}}{1+\alpha(\tau)\lambda^2}[\alpha(\tau)g_1'(\tau)+\beta(\tau)g_1(\tau)]\,d\tau\right\}d\lambda$$

$$-\int_{\mathcal{L}}\left\{i\lambda e^{i\lambda x-\Omega(\lambda,t)}\int_{\tau=0}^{t}\frac{e^{\Omega(\lambda,\tau)}}{1+\alpha(\tau)\lambda^2}[\alpha(\tau)g_0'(\tau)+\beta(\tau)g_0(\tau)]\,d\tau\right\}d\lambda+\int_{-\infty}^{\infty}\left\{e^{i\lambda x-\Omega(\lambda,t)}\int_{\tau=0}^{t}\frac{e^{\Omega(\lambda,\tau)}}{1+\alpha(\tau)\lambda^2}\hat{f}(\lambda,\tau)\,d\tau\right\}d\lambda,$$

其中，$\mathcal{L}$是如下面图 1 所示的轮廓。更准确地说，它由两条平行于虚轴的半直线和一条连接这两条半直线的半圆形曲线组成，并按图 1 所示的方向逆时针定向。对半直线作“小幅”变形，不会改变 (2.8) 中积分的值，这些积分沿这种变形后的 $\mathcal{L}$ 计算。

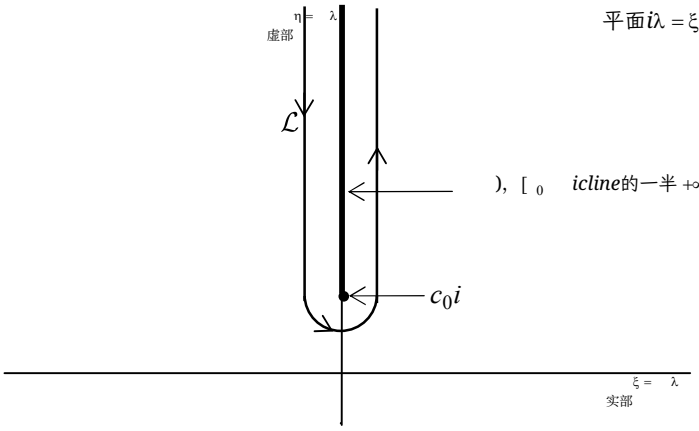

图 1 轮廓的一种选取。 $\mathcal{L}$

另一方面，(2.7) 给出

$$(2.9)\quad 0=\int_{\mathcal{L}} e^{i\lambda x}\hat{u}(-\lambda,t)d\lambda$$
$$=\int_{\mathcal{L}} e^{i\lambda x-\Omega(\lambda,t)}\hat{u}_0(-\lambda)d\lambda-\int_{\mathcal{L}}\left\{e^{i\lambda x-\Omega(\lambda,t)}\int_{\tau=0}^{t}\frac{e^{\Omega(\lambda,\tau)}}{1+\alpha(\tau)\lambda^2}[\alpha(\tau)g_1'(\tau)+\beta(\tau)g_1(\tau)]\,d\tau\right\}d\lambda$$
$$+\int_{\mathcal{L}}\left\{i\lambda e^{i\lambda x-\Omega(\lambda,t)}\int_{\tau=0}^{t}\frac{e^{\Omega(\lambda,\tau)}}{1+\alpha(\tau)\lambda^2}[\alpha(\tau)g_0'(\tau)+\beta(\tau)g_0(\tau)]\,d\tau\right\}d\lambda+\int_{\mathcal{L}}\left\{e^{i\lambda x-\Omega(\lambda,t)}\int_{\tau=0}^{t}\frac{e^{\Omega(\lambda,\tau)}}{1+\alpha(\tau)\lambda^2}\hat{f}(-\lambda,\tau)\,d\tau\right\}d\lambda.$$

从 (2.8) 中减去 (2.9)，得到狄利克雷问题 1 的解：对于 $x>0$ 和 $t>0$ ，

$$(2.10)\quad 2\pi u(x,t)=\int_{-\infty}^{\infty} e^{i\lambda x-\Omega(\lambda,t)}\hat{u}_0(\lambda)d\lambda-\int_{\mathcal{L}} e^{i\lambda x-\Omega(\lambda,t)}\hat{u}_0(-\lambda)d\lambda$$
$$-2\int_{\mathcal{L}}\left\{i\lambda e^{i\lambda x-\Omega(\lambda,t)}\int_{\tau=0}^{t}\frac{e^{\Omega(\lambda,\tau)}}{1+\alpha(\tau)\lambda^2}[\alpha(\tau)g_0'(\tau)+\beta(\tau)g_0(\tau)]\,d\tau\right\}d\lambda$$
$$+\int_{-\infty}^{\infty}\left\{e^{i\lambda x-\Omega(\lambda,t)}\int_{\tau=0}^{t}\frac{e^{\Omega(\lambda,\tau)}}{1+\alpha(\tau)\lambda^2}\hat{f}(\lambda,\tau)\,d\tau\right\}d\lambda-\int_{\mathcal{L}}\left\{e^{i\lambda x-\Omega(\lambda,t)}\int_{\tau=0}^{t}\frac{e^{\Omega(\lambda,\tau)}}{1+\alpha(\tau)\lambda^2}\hat{f}(-\lambda,\tau)\,d\tau\right\}d\lambda.$$

注 若函数 $\alpha(t)$ 还满足条件

$$C_0:=\sup\{1/\sqrt{\alpha(t)}:t\geq 0\}<+\infty,$$

公式 (2.10) $\mathcal{L}$中的轮廓可以替换为任意有限的闭合轮廓，该轮廓围绕线段 $[0,T]$ 并按逆时针方向定向，如下方图 2 所示。

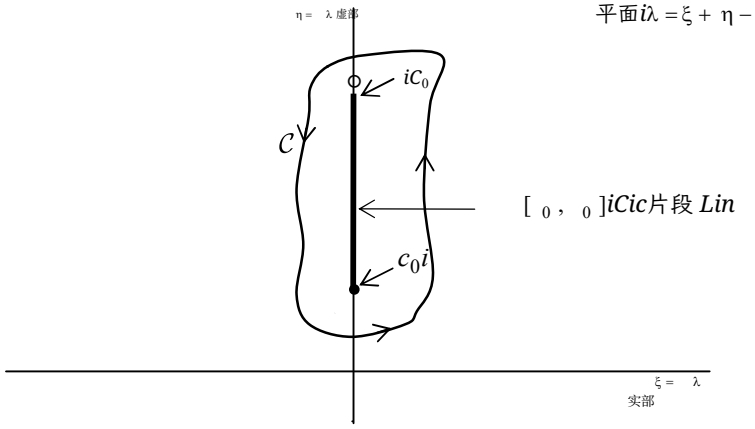

图 2 轮廓的一种选取。 $\mathcal{C}$

Neumann问题 求解

$$\begin{cases} \partial_t u = \alpha(t)\partial_{xxt} u + \beta(t)\partial_{xx} u - \gamma(t)u + f(x,t), \ (x,t) \in \mathbb{R}^+ \times \mathbb{R}^+, \\ u(x,0) = u_0(x), \ x \in \mathbb{R}^+, \\ u_x(0,t) = g_1(t), \ t \in \mathbb{R}^+, \end{cases} \tag{2.11}$$

สำหรับ),
(*txu* .

与狄利克雷问题的情形类似，我们发现上述 Neumann问题的解由以下公式给出:

$$\begin{aligned} 2\pi u(x,t) = & \int_{-\infty}^{\infty} e^{i\lambda x - \Omega(\lambda,t)} \hat{u}_0(\lambda) d\lambda - \int_{\mathcal{L}} e^{i\lambda x - \Omega(\lambda,t)} \hat{u}_0(-\lambda) d\lambda \\ & - 2\int_{\mathcal{L}} \left\{ e^{i\lambda x - \Omega(\lambda,t)} \int_{\tau=0}^{t} \frac{e^{\Omega(\lambda,\tau)}}{1+\alpha(\tau)\lambda^2} [\alpha(\tau) g_1'(\tau) + \beta(\tau) g_1(\tau)] \, d\tau \right\} d\lambda \\ & + \int_{-\infty}^{\infty} \left\{ e^{i\lambda x - \Omega(\lambda,t)} \int_{\tau=0}^{t} \frac{e^{\Omega(\lambda,\tau)}}{1+\alpha(\tau)\lambda^2} \hat{f}(\lambda,\tau) \, d\tau \right\} d\lambda - \int_{\mathcal{L}} \left\{ e^{i\lambda x - \Omega(\lambda,t)} \int_{\tau=0}^{t} \frac{e^{\Omega(\lambda,\tau)}}{1+\alpha(\tau)\lambda^2} \hat{f}(-\lambda,\tau) \, d\tau \right\} d\lambda . \end{aligned} \tag{2.12}$$

3. The operator $\partial_t - \alpha\partial_{xxt} + \beta(t)\partial_x$

问题 ***2*** 求解

$$\begin{cases} \partial_t u = \alpha\partial_{xxt} u - \beta(t)\partial_x u + f(x,t), \ (x,t) \in Q, \\ u(x,0) = u_0(x), \ x \in \mathbb{R}^+, \\ u(0,t) = g_0(t), \ t \in \mathbb{R}^+, \end{cases} \tag{3.1}$$

对于),(*txu* 。

D解的推导 进行傅里叶变换，(3.1) 中的微分方程给出

$$\frac{\partial}{\partial t}[\hat{u}(\lambda,t)] = \alpha \frac{\partial}{\partial t}\left[\int_0^{\infty} \frac{\partial^2 u(y,t)}{\partial y^2} e^{-i\lambda y} dy \right] - \beta(t) \int_0^{\infty} \frac{\partial u(y,t)}{\partial y} e^{-i\lambda y} dy . \tag{3.2}$$

对式 (3.2) 进行分部积分，得到:

$$(1+\alpha\lambda^2)\frac{\partial}{\partial t}[\hat{u}(\lambda,t)] + i\beta(t)\lambda\hat{u}(\lambda,t) = -\alpha[g_1'(t) + i\lambda g_0'(t)] + \beta(t) g_0(t) + \hat{f}(\lambda,t) .$$

由此可得

$$\frac{\partial}{\partial t}[\hat{u}(\lambda,t)]+\frac{i\beta(t)\lambda}{1+\alpha\lambda^2}\hat{u}(\lambda,t)=\frac{1}{1+\alpha\lambda^2}[\beta(t)g_0(t)-i\alpha\lambda g_0'(t)]-\frac{\alpha}{1+\alpha\lambda^2}g_1'(t)+\frac{\hat{f}(\lambda,t)}{1+\alpha\lambda^2}.$$

因此，令

$$\omega(\lambda,t)=\frac{i\beta(t)\lambda}{1+\alpha\lambda^2}\ \text{ and }\ \Omega(\lambda,t)=\int_{\tau=0}^{t}\frac{i\beta(\tau)\lambda}{1+\alpha\lambda^2}d\tau\ ,$$

我们有

$$\frac{\partial}{\partial t}[e^{\Omega(\lambda,t)}\hat{u}(\lambda,t)]=\frac{e^{\Omega(\lambda,t)}}{1+\alpha\lambda^2}[\beta(t)g_0(t)-i\alpha\lambda g_0'(t)]-\frac{\alpha e^{\Omega(\lambda,t)}}{1+\alpha\lambda^2}g_1'(t)+\frac{e^{\Omega(\lambda,t)}\hat{f}(\lambda,t)}{1+\alpha\lambda^2}.$$

因此,

$$e^{\Omega(\lambda,t)}\hat{u}(\lambda,t)=\hat{u}_0(\lambda)+\int_{\tau=0}^{t}\left\{\frac{e^{\Omega(\lambda,t)}}{1+\alpha\lambda^2}[\beta(t)g_0(t)-i\alpha\lambda g_0'(t)]-\frac{\alpha e^{\Omega(\lambda,t)}}{1+\alpha\lambda^2}g_1'(t)+\frac{e^{\Omega(\lambda,t)}\hat{f}(\lambda,t)}{1+\alpha\lambda^2}\right\}d\tau\ ,$$

并且, equi valently,

$$\text{(3.3)}\quad \hat{u}(\lambda,t)=e^{-\Omega(\lambda,t)}\hat{u}_0(\lambda)+\frac{e^{-\Omega(\lambda,t)}}{1+\alpha\lambda^2}\int_{\tau=0}^{t}e^{\Omega(\lambda,\tau)}[\beta(\tau)g_0(\tau)-i\alpha\lambda g_0'(\tau)]d\tau$$
$$-\frac{\alpha e^{-\Omega(\lambda,t)}}{1+\alpha\lambda^2}\int_{\tau=0}^{t}e^{\Omega(\lambda,\tau)}g_1'(\tau)d\tau+\frac{e^{-\Omega(\lambda,t)}}{1+\alpha\lambda^2}\int_{\tau=0}^{t}e^{\Omega(\lambda,\tau)}\hat{f}(\lambda,\tau)d\tau\ .$$

将 (3.3) 乘以 e 并积分，得到

$$\text{(3.4)}\quad 2\pi u(x,t)=\int_{-\infty}^{\infty}e^{i\lambda x}\hat{u}(\lambda,t))d\lambda$$
$$=\int_{-\infty}^{\infty}e^{i\lambda x-\Omega(\lambda,t)}\hat{u}_0(\lambda)d\lambda+\int_{-\infty}^{\infty}\left\{\frac{e^{i\lambda x-\Omega(\lambda,t)}}{1+\alpha\lambda^2}\int_{\tau=0}^{t}e^{\Omega(\lambda,\tau)}[\beta(\tau)g_0(\tau)-i\alpha\lambda g_0'(\tau)]d\tau\right\}d\lambda$$
$$-\int_{-\infty}^{\infty}\left\{\frac{\alpha e^{i\lambda x-\Omega(\lambda,t)}}{1+\alpha\lambda^2}\int_{\tau=0}^{t}e^{\Omega(\lambda,\tau)}g_1'(\tau)d\tau\right\}d\lambda+\int_{-\infty}^{\infty}\left\{\frac{e^{i\lambda x-\Omega(\lambda,t)}}{1+\alpha\lambda^2}\int_{\tau=0}^{t}e^{\Omega(\lambda,\tau)}\hat{f}(\lambda,\tau)d\tau\right\}d\lambda\ .$$

由于

$$\lim_{\lambda\to\infty}\Omega(\lambda,t)=0\text{, uniformly for }t\text{ in compact subsets of }[0,+\infty),$$

我们可以变形 (3.4) 中积分的积分路径，其中包含以下项

$$\beta(\tau)g_0(\tau)-i\alpha\lambda g_0'(\tau)\ \text{ and }\ g_1'(\tau),$$

得到公式

$$\text{(3.5)}\quad 2\pi u(x,t)=\int_{-\infty}^{\infty}e^{i\lambda x}\hat{u}(\lambda,t))d\lambda$$
$$=\int_{-\infty}^{\infty}e^{i\lambda x-\Omega(\lambda,t)}\hat{u}_0(\lambda)d\lambda+\int_{C}\left\{\frac{e^{i\lambda x-\Omega(\lambda,t)}}{1+\alpha\lambda^2}\int_{\tau=0}^{t}e^{\Omega(\lambda,\tau)}[\beta(\tau)g_0(\tau)-i\alpha\lambda g_0'(\tau)]d\tau\right\}d\lambda$$
$$-\int_{C}\left\{\frac{\alpha e^{i\lambda x-\Omega(\lambda,t)}}{1+\alpha\lambda^2}\int_{\tau=0}^{t}e^{\Omega(\lambda,\tau)}g_1'(\tau)d\tau\right\}d\lambda+\int_{-\infty}^{\infty}\left\{\frac{e^{i\lambda x-\Omega(\lambda,t)}}{1+\alpha\lambda^2}\int_{\tau=0}^{t}e^{\Omega(\lambda,\tau)}\hat{f}(\lambda,\tau)d\tau\right\}d\lambda\ ,$$

其中，轮廓是任意足够小的简单闭曲线，围绕点 $\lambda=\sqrt{\alpha}/i$，位于上半平面 $\{\lambda\in:\mathrm{Im}\lambda>0\}$ 内，并按逆时针方向定向（见图 3）。

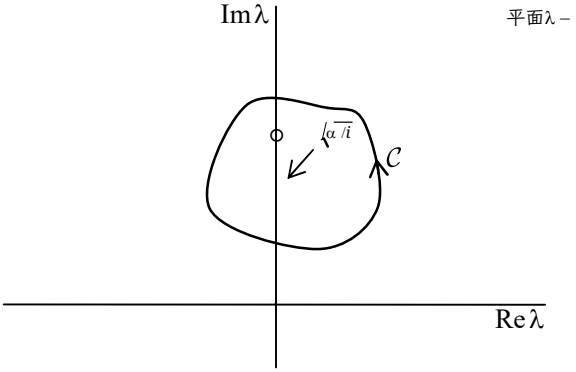

图 3 典型轮廓。 $\mathcal{C}$

接下来注意到

$$\omega(1/(\alpha\lambda),t)=\omega(\lambda,t) \text{ and } \Omega(1/(\alpha\lambda),t)=\Omega(\lambda,t),$$

并在 (3.3) 中用)/(1 αλ 替换 λ，得到

$$(3.6)\quad \hat{u}(1/(\alpha\lambda),t)=e^{-\Omega(\lambda,t)}\hat{u}_0(1/(\alpha\lambda))+\frac{\alpha\lambda}{1+\alpha\lambda^2}e^{-\Omega(\lambda,t)}\int_{\tau=0}^{t}e^{\Omega(\lambda,\tau)}[\lambda\beta(\tau)g_0(\tau)-ig_0'(\tau)]d\tau$$
$$-\frac{\alpha\lambda^2}{1+\alpha\lambda^2}e^{-\Omega(\lambda,t)}\int_{\tau=0}^{t}e^{\Omega(\lambda,\tau)}g_1'(\tau)d\tau+\frac{e^{-\Omega(\lambda,t)}}{1+\alpha\lambda^2}\int_{\tau=0}^{t}e^{\Omega(\lambda,\tau)}\hat{f}(\lambda,\tau)d\tau .$$

将 (3.6) 乘以 /λ e ，$^{i\lambda x}$ 并对 ^{2} λ ∈ 积分，可得 $\mathcal{C}$

$$(3.7)\quad 0=\int_{\mathcal{C}}\frac{1}{\lambda^2}e^{i\lambda x-\Omega(\lambda,t)}\hat{u}_0(1/(\alpha\lambda))d\lambda+\int_{\mathcal{C}}\left\{\frac{\alpha e^{i\lambda x-\Omega(\lambda,t)}}{\lambda(1+\alpha\lambda^2)}\int_{\tau=0}^{t}e^{\Omega(\lambda,\tau)}[\lambda\beta(\tau)g_0(\tau)-ig_0'(\tau)]d\tau\right\}d\lambda$$
$$-\int_{\mathcal{C}}\left\{\frac{\alpha e^{i\lambda x-\Omega(\lambda,t)}}{1+\alpha\lambda^2}\int_{\tau=0}^{t}e^{\Omega(\lambda,\tau)}g_1'(\tau)d\tau\right\}d\lambda+\int_{\mathcal{C}}\left\{\frac{e^{i\lambda x-\Omega(\lambda,t)}}{\lambda^2(1+\alpha\lambda^2)}\int_{\tau=0}^{t}e^{\Omega(\lambda,\tau)}\hat{f}(\lambda,\tau)d\tau\right\}d\lambda ,$$

where we used the fact that

$$\int_{\mathcal{C}}\frac{e^{i\lambda x}}{\lambda^2}\hat{u}(1/(\alpha\lambda),t)d\lambda=0 .$$

将（3.7）从（3.5）中相减，我们得到狄利克雷问题（3.1）的解的公式：

$$2\pi u(x,t)=\int_{-\infty}^{\infty}e^{i\lambda x-\Omega(\lambda,t)}\hat{u}_0(\lambda)d\lambda-\int_{\mathcal{C}}\frac{1}{\lambda^2}e^{i\lambda x-\Omega(\lambda,t)}\hat{u}_0(1/(\alpha\lambda))d\lambda$$
$$+\int_{\mathcal{C}}\left\{\frac{e^{i\lambda x-\Omega(\lambda,t)}}{1+\alpha\lambda^2}\int_{\tau=0}^{t}e^{\Omega(\lambda,\tau)}\left[(1-\alpha)\beta(\tau)g_0(\tau)+\frac{i\alpha(1-\lambda^2)}{\lambda}g_0'(\tau)\right]d\tau\right\}d\lambda$$
$$\int_{-\infty}^{\infty}\left\{\frac{e^{i\lambda x-\Omega(\lambda,t)}}{1+\alpha\lambda^2}\int_{\tau=0}^{t}e^{\Omega(\lambda,\tau)}\hat{f}(\lambda,\tau)d\tau\right\}d\lambda-\int_{\mathcal{C}}\left\{\frac{e^{i\lambda x-\Omega(\lambda,t)}}{\lambda^2(1+\alpha\lambda^2)}\int_{\tau=0}^{t}e^{\Omega(\lambda,\tau)}\hat{f}(\lambda,\tau)d\tau\right\}d\lambda .$$

4. The operator $\partial_t+\alpha(t)\partial_{xxxxt}+\beta(t)\partial_{xxxx}+\gamma(t)$

问题 ***3*** 求解

$$(4.1)\qquad \begin{cases}\partial_t u=-\alpha(t)\partial_{xxxxt}u-\beta(t)\partial_{xxxx}u-\gamma(t)u+f(x,t),\ (x,t)\in\mathbb{R}^+\times\mathbb{R}^+,\\ u(x,0)=u_0(x),\ x\in\mathbb{R}^+,\\ u(0,t)=g_0(t),\ t\in\mathbb{R}^+,\\ u_x(0,t)=g_1(t),\ t\in\mathbb{R}^+,\end{cases}$$

对于 (x,t) 。

解的推导 采用前几节中的记号，进行傅里叶变换并分部积分，可知 (4.1) 中的微分方程对于 $\lambda\in\mathbb{C}$ 且满足 $\arg\lambda\le$ 时给出,

$$\frac{\partial}{\partial t}[\hat{u}(\lambda,t)]+\alpha(t)\left\{\lambda^4\frac{\partial}{\partial t}[\hat{u}(\lambda,t)]-g'_3(t)-i\lambda g'_2(t)-(i\lambda)^2g'_1(t)-(i\lambda)^3g'_0(t)\right\}$$
$$+\beta(t)[\lambda^4\hat{u}(\lambda,t)-g_3(t)-i\lambda g_2(t)-(i\lambda)^2g_1(t)-(i\lambda)^3g_0(t)]+\gamma(t)\hat{u}(\lambda,t)=\hat{f}(\lambda,t),$$

$\Rightarrow$

$$[1+\alpha(t)\lambda^4]\frac{\partial}{\partial t}[\hat{u}(\lambda,t)]+[\beta(t)\lambda^4+\gamma(t)]\hat{u}(\lambda,t)=\alpha(t)[g'_3(t)+i\lambda g'_2(t)-\lambda^2g'_1(t)-i\lambda^3g'_0(t)]$$
$$+\beta(t)[g_3(t)+i\lambda g_2(t)-\lambda^2g_1(t)-i\lambda^3g_0(t)]+\hat{f}(\lambda,t)$$

$\Rightarrow$

$$(4.2)\qquad \frac{\partial}{\partial t}[\hat{u}(\lambda,t)]+\frac{\beta(t)\lambda^4+\gamma(t)}{1+\alpha(t)\lambda^4}\hat{u}(\lambda,t)=\frac{1}{1+\alpha(t)\lambda^4}[G_3(t)+i\lambda G_2(t)-\lambda^2G_1(t)-i\lambda^3G_0(t)]+\frac{1}{1+\alpha(t)\lambda^4}\hat{f}(\lambda,t),$$

其中 we have set

$$G_3(t)=\alpha(t)g'_3(t)+\beta(t)g_3(t),\ G_2(t)=\alpha(t)g'_2(t)+\beta(t)g_2(t),$$
$$G_1(t)=\alpha(t)g'_1(t)+\beta(t)g_1(t),\ G_0(t)=\alpha(t)g'_0(t)+\beta(t)g_0(t).$$

令,

$$\omega(\lambda,t)=\frac{\beta(t)\lambda^4+\gamma(t)}{1+\alpha(t)\lambda^4}\quad\text{and}\quad\Omega(\lambda,t)=\int_{\tau=0}^{t}\omega(\lambda,\tau)d\tau=\int_{\tau=0}^{t}\frac{\beta(\tau)\lambda^4+\gamma(\tau)}{1+\alpha(\tau)\lambda^4}d\tau,$$

我们将 (4.2) 写成以下形式:

$$\frac{\partial}{\partial t}[e^{\Omega(\lambda,t)}\hat{u}(\lambda,t)]=\frac{e^{\Omega(\lambda,t)}}{1+\alpha(t)\lambda^4}[G_3(t)+i\lambda G_2(t)-\lambda^2G_1(t)-i\lambda^3G_0(t)]+\frac{e^{\Omega(\lambda,t)}}{1+\alpha(t)\lambda^4}\hat{f}(\lambda,t).$$

对上述方程积分可得，对于 $\lambda\in\mathbb{C}$ 且 $\arg\lambda\le$ ，

$$(4.3)\quad e^{\Omega(\lambda,t)}\hat{u}(\lambda,t)=\hat{u}_0(\lambda)+\int_{\tau=0}^{t}\frac{e^{\Omega(\lambda,\tau)}}{1+\alpha(\tau)\lambda^4}[G_3(\tau)+i\lambda G_2(\tau)-\lambda^2G_1(\tau)-i\lambda^3G_0(\tau)]d\tau+\int_{\tau=0}^{t}\frac{e^{\Omega(\lambda,\tau)}}{1+\alpha(\tau)\lambda^4}\hat{f}(\lambda,\tau)d\tau.$$

设置,

$$\widetilde{G}_j(\Omega,\lambda,t)=\widetilde{G}_j(\Omega(\lambda,t),\lambda,t)=\int_{\tau=0}^{t}\frac{e^{\Omega(\lambda,\tau)}}{1+\alpha(\tau)\lambda^4}G_j(\tau)d\tau,\ j=1,2,3,4,$$

and

$$\widetilde{\hat{f}}(\Omega,\lambda,t)=\widetilde{\hat{f}}(\Omega(\lambda,t),\lambda,t)=\int_{\tau=0}^{t}\frac{e^{\Omega(\lambda,\tau)}}{1+\alpha(\tau)\lambda^4}\hat{f}(\lambda,\tau)d\tau,$$

我们将 (4,3) 写成如下形式:

$$(4.4)\quad \hat{u}(\lambda,t)=e^{-\Omega(\lambda,t)}\hat{u}_0(\lambda)+e^{-\Omega(\lambda,t)}\widetilde{G}_3(\Omega(\lambda,t),\lambda,t)+i\lambda e^{-\Omega(\lambda,t)}\widetilde{G}_2(\Omega(\lambda,t),\lambda,t)$$
$$-\lambda^2 e^{-\Omega(\lambda,t)}\widetilde{G}_1(\Omega(\lambda,t),\lambda,t)-i\lambda^3 e^{-\Omega(\lambda,t)}\widetilde{G}_0(\Omega(\lambda,t),\lambda,t)+e^{-\Omega(\lambda,t)}\widetilde{\hat{f}}(\Omega(\lambda,t),\lambda,t).$$

接下来，我们寻找满足以下条件的函数)(σ λ

$$\omega(\sigma(\lambda),t)=\omega(\lambda,t)\ \Rightarrow\ \frac{\beta(t)[\sigma(\lambda)]^4+\gamma(t)}{1+\alpha(t)[\sigma(\lambda)]^4}=\frac{\beta(t)\lambda^4+\gamma(t)}{1+\alpha(t)\lambda^4}.$$

求解上述代数方程，我们得到

$$(4.5)\qquad \sigma(\lambda)=\lambda\ \text{ or }\ \sigma(\lambda)=-\lambda\ \text{ or }\ \sigma(\lambda)=i\lambda\ \text{ or }\ \sigma(\lambda)=-i\lambda\ .$$

（为了使该方法成立，至关重要的是，所有满足方程),(),(ttω σ =ω λ 的函数 σ 都不依赖于 t。）

根据函数 (4.5) 的选取，我们有

$$\Omega(\lambda,t)=\Omega(-\lambda,t)=\Omega(i\lambda,t)=\Omega(-i\lambda,t),$$

and

$$\frac{e^{\Omega(\lambda,t)}}{1+\alpha(t)\lambda^4}=\frac{e^{\Omega(-\lambda,t)}}{1+\alpha(t)(-\lambda)^4}=\frac{e^{\Omega(i\lambda,t)}}{1+\alpha(t)(i\lambda)^4}=\frac{e^{\Omega(-i\lambda,t)}}{1+\alpha(t)(-i\lambda)^4}.$$

因此，在 (4.4) 中令 $-\lambda$ ，λ i 和 λ $i-$ 代替 λ ，可得

$$(4.5)\quad \hat{u}(-\lambda,t)=e^{-\Omega(\lambda,t)}\hat{u}_0(-\lambda)+e^{-\Omega(\lambda,t)}\widetilde{G}_3(\Omega(\lambda,t),\lambda,t)-i\lambda e^{-\Omega(\lambda,t)}\widetilde{G}_2(\Omega(\lambda,t),\lambda,t)$$
$$-\lambda^2 e^{-\Omega(\lambda,t)}\widetilde{G}_1(\Omega(\lambda,t),\lambda,t)+i\lambda^3 e^{-\Omega(\lambda,t)}\widetilde{G}_0(\Omega(\lambda,t),\lambda,t)+e^{-\Omega(\lambda,t)}\widetilde{\hat{f}}(\Omega(\lambda,t),-\lambda,t),\ \text{with}\ \operatorname{Im}\lambda\ge 0,$$

(4.6) (ttGettGeiuetiu),),,((−),),,((−)("),(" t t t λ = −Ω λ 0 λ + −Ω λ 3 Ω λ λ −λ2 −Ω λ 2 Ω λ λ),Ω,( ),

$$+\lambda^2 e^{-\Omega(\lambda,t)}\widetilde{G}_1(\Omega(\lambda,t),\lambda,t)-\lambda^3 e^{-\Omega(\lambda,t)}\widetilde{G}_0(\Omega(\lambda,t),\lambda,t)+e^{-\Omega(\lambda,t)}\widetilde{\hat{f}}(\Omega(\lambda,t),i\lambda,t),\ \text{with}\ \operatorname{Im}(i\lambda)\le 0,$$

and

$$(4.7)\quad \hat{u}(-i\lambda,t)=e^{-\Omega(\lambda,t)}\hat{u}_0(-i\lambda)+e^{-\Omega(\lambda,t)}\widetilde{G}_3(\Omega(\lambda,t),\lambda,t)+\lambda^2 e^{-\Omega(\lambda,t)}\widetilde{G}_2(\Omega(\lambda,t),\lambda,t)$$
$$+\lambda^2 e^{-\Omega(\lambda,t)}\widetilde{G}_1(\Omega(\lambda,t),\lambda,t)-i\lambda^3 e^{-\Omega(\lambda,t)}\widetilde{G}_0(\Omega(\lambda,t),\lambda,t)+e^{-\Omega(\lambda,t)}\widetilde{\hat{f}}(\Omega(\lambda,t),\lambda,t),\ \text{with}\ \operatorname{Im}(-i\lambda)\le 0.$$

此外，将 (4.4) 乘以 xie^{λ} 并积分，对于 $>0x$ 和 $>0t$ ，可得

$$(4.8)\quad 2\pi u(x,t)=\int_{-\infty}^{\infty}e^{i\lambda x}\hat{u}(\lambda,t)d\lambda$$
$$=\int_{-\infty}^{\infty}e^{i\lambda x-\Omega(\lambda,t)}\hat{u}_0(\lambda)d\lambda+\int_{-\infty}^{\infty}e^{i\lambda x-\Omega(\lambda,t)}\widetilde{G}_3(\Omega(\lambda,t),\lambda,t)d\lambda+\int_{-\infty}^{\infty}i\lambda e^{i\lambda x-\Omega(\lambda,t)}\widetilde{G}_2(\Omega(\lambda,t),\lambda,t)d\lambda$$
$$-\int_{-\infty}^{\infty}\lambda^2 e^{i\lambda x-\Omega(\lambda,t)}\widetilde{G}_1(\Omega(\lambda,t),\lambda,t)d\lambda-\int_{-\infty}^{\infty}i\lambda^3 e^{i\lambda x-\Omega(\lambda,t)}\widetilde{G}_0(\Omega(\lambda,t),\lambda,t)d\lambda+\int_{-\infty}^{\infty}e^{i\lambda x-\Omega(\lambda,t)}\widetilde{\hat{f}}(\Omega(\lambda,t),\lambda,t)d\lambda.$$

接下来，注意到

$$1+\alpha(t)\lambda^4=0\ \Rightarrow\ \lambda=\pm e^{i\pi/4}/\sqrt[4]{\alpha(t)}\ \text{ or }\ \lambda=\pm e^{i3\pi/4}/\sqrt[4]{\alpha(t)},$$

我们考虑这些函数

$$\lambda_1(t) := e^{i\pi/4}/\sqrt[4]{\alpha(t)} \text{ and } \lambda_2 := e^{i3\pi/4}/\sqrt[4]{\alpha(t)}\,.$$

我们注意到

$$\lambda_1(t) \in \ell_1 := [c_0 e^{i\pi/4}, \infty e^{i\pi/4}) = \{ce^{i\pi/4} : c \ge c_0\} \text{ and } \lambda_2(t) \in \ell_2 := [c_0 e^{i3\pi/4}, \infty e^{i3\pi/4}) = \{ce^{i3\pi/4} : c \ge c_0\}\,.$$

（我们假设 $_0 = \quad 1 \sqrt[4]{\alpha} \quad \ge 0 \quad > 0 \quad \}:)(\overline{\inf\{:tt} \quad c \quad .))$

固定 $> 0x$ 和 $> 0t$ ，并变形涉及量),),,((~ ttG_j Ω λ λ 的积分路径，我们将 (4.8) 写成如下形式：

$$(4.9)\quad 2\pi u(x,t) = \int_{-\infty}^{\infty} e^{i\lambda x - \Omega(\lambda,t)} \hat{u}_0(\lambda)\, d\lambda$$
$$+ \left(\int_{\mathcal{L}_1} + \int_{\mathcal{L}_2}\right)[e^{i\lambda x - \Omega(\lambda,t)} \widetilde{G}_3(\Omega(\lambda,t),\lambda,t)\, d\lambda] + \left(\int_{\mathcal{L}_1} + \int_{\mathcal{L}_2}\right)[i\lambda e^{i\lambda x - \Omega(\lambda,t)} \widetilde{G}_2(\Omega(\lambda,t),\lambda,t)\, d\lambda]$$
$$- \left(\int_{\mathcal{L}_1} + \int_{\mathcal{L}_2}\right)[\lambda^2 e^{i\lambda x - \Omega(\lambda,t)} \widetilde{G}_1(\Omega(\lambda,t),\lambda,t)\, d\lambda] - \left(\int_{\mathcal{L}_1} + \int_{\mathcal{L}_2}\right)[i\lambda^3 e^{i\lambda x - \Omega(\lambda,t)} \widetilde{G}_0(\Omega(\lambda,t),\lambda,t)\, d\lambda]$$
$$+ \int_{-\infty}^{\infty} e^{i\lambda x - \Omega(\lambda,t)} \widetilde{\hat{f}}(\Omega(\lambda,t),\lambda,t)\, d\lambda\,,$$

其中，积分路径 1 和 2 如下文图 4 所示。更确切地说，1 和 2 分别是半直线 $\mathcal{L}$),[$_0$ $\mathcal{L}$ $^{\pi\ 4}$ $^{\pi\ 4}$/ /i i eec +∞ 和),[$_0$ $^{3\pi\ 4}$ +∞ $^{3\pi\ 4}$/ /i i eec 的充分小且边界光滑的邻域的边界，方向均为逆时针。（我们假设积分路径在无穷远处的开口宽度有正下界。）

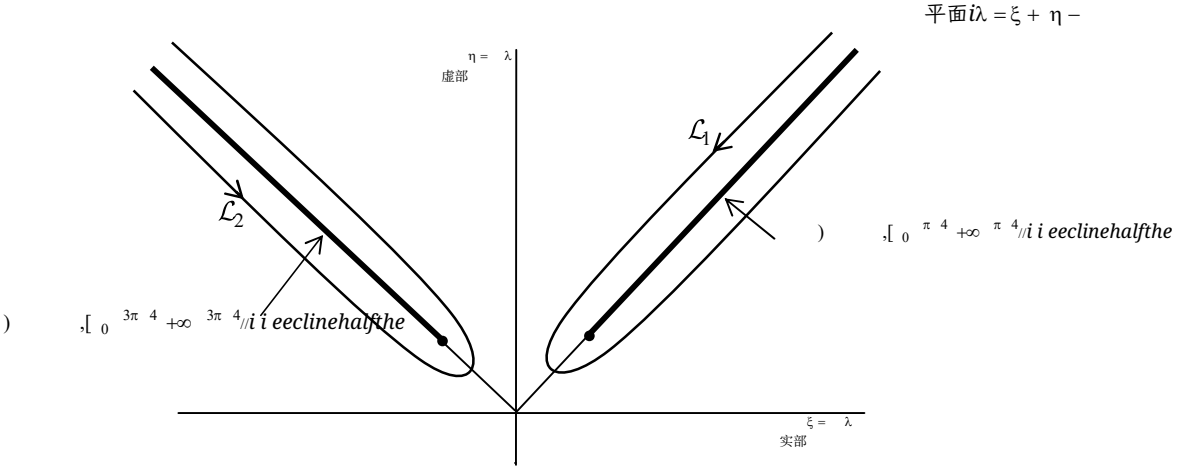

图 4 积分路径 1 和 2 的选择。$\mathcal{L}$ $\mathcal{L}$

使用缩写

$$\mathfrak{G}_j = \mathfrak{G}_j(\lambda,x,t) := e^{i\lambda x - \Omega(\lambda,t)} \widetilde{G}_j(\Omega(\lambda,t),\lambda,t)\,,\ j = 1,2,3,4\,,$$

我们将 (4.9) 写成

$$(4.10)\quad 2\pi u(x,t) = \int_{-\infty}^{\infty} e^{i\lambda x - \Omega(\lambda,t)} \hat{u}_0(\lambda)\, d\lambda$$

$$+\int_{\mathcal{L}_1}\mathfrak{G}_3(\lambda,x,t)d\lambda+\int_{\mathcal{L}_2}\mathfrak{G}_3(\lambda,x,t)d\lambda+\int_{\mathcal{L}_1}i\lambda\mathfrak{G}_2(\lambda,x,t)d\lambda+\int_{\mathcal{L}_2}i\lambda\mathfrak{G}_2(\lambda,x,t)d\lambda$$
$$+\int_{\mathcal{L}_1}\lambda^2\mathfrak{G}_1(\lambda,x,t)d\lambda+\int_{\mathcal{L}_2}\lambda^2\mathfrak{G}_1(\lambda,x,t)d\lambda+\int_{\mathcal{L}_1}i\lambda^3\mathfrak{G}_0(\lambda,x,t)d\lambda+\int_{\mathcal{L}_2}i\lambda^3\mathfrak{G}_0(\lambda,x,t)d\lambda d\lambda$$
$$+\int_{-\infty}^{\infty}e^{i\lambda x-\Omega(\lambda,t)}\widetilde{\hat{f}}(\Omega(\lambda,t),\lambda,t)d\lambda\,.$$

为了完成解的构造，我们必须用数据表示 (4.10) 中出现的 3 和 2 的积分。为此，我们将使用方程(4,5)、(4,6) 和 (4,7)，它们可以写成如下形式：

(4.11) $e^{i\lambda x}\hat{u}(-\lambda,t)=e^{i\lambda x-\Omega(\lambda,t)}\hat{u}_0(-\lambda)+\mathfrak{G}_3(\lambda,x,t)-i\lambda\mathfrak{G}_2(\lambda,x,t)$

$$-\lambda^2\mathfrak{G}_1(\lambda,x,t)+i\lambda^3\mathfrak{G}_0(\lambda,x,t)+e^{i\lambda x-\Omega(\lambda,t)}\widetilde{\hat{f}}(\Omega(\lambda,t),-\lambda,t),\ \text{for}\ \operatorname{Im}(-\lambda)\le 0\,,$$

（4.12））， ， 0， ， 0(ˆ)， (ˆ 2 30)， (*txtxiuetiue txi xi*

$$\lambda\quad\lambda\quad=\quad^{\lambda\ -\Omega\ \lambda}\qquad\lambda\ +\mathfrak{G}\ \lambda\qquad-\lambda\mathfrak{G}\ \lambda$$

$$+\lambda^2\mathfrak{G}_1(\lambda,x,t)-\lambda^3\mathfrak{G}_0(\lambda,x,t)+e^{i\lambda x-\Omega(\lambda,t)}\widetilde{\hat{f}}(\Omega(\lambda,t),i\lambda,t),\ \text{for}\ \operatorname{Im}(i\lambda)\le 0\,,$$

(4.13))，，()，，()(ˆ)，(ˆ 2 3 0)，(*txtxiuetiue*

$$txi\ xi\ \lambda\quad-\lambda\quad=\quad^{\lambda\ -\Omega\ \lambda}\qquad-\lambda\ +\mathfrak{G}\ \lambda\qquad+\lambda\mathfrak{G}\ \lambda$$

$$+\lambda^2\mathfrak{G}_1(\lambda,x,t)+\lambda^3\mathfrak{G}_0(\lambda,x,t)+e^{i\lambda x-\Omega(\lambda,t)}\widetilde{\hat{f}}(\Omega(\lambda,t),-i\lambda,t)\,,\ \text{for}\ \lambda\in\mathbb{C}\ \text{with}\ \operatorname{Im}(-i\lambda)\le 0\,.$$

为了确定这些积分的值

$$\int_{\mathcal{L}_1}\mathfrak{G}_3(\lambda,x,t)d\lambda\ \text{ and }\int_{\mathcal{L}_1}i\lambda\mathfrak{G}_2(\lambda,x,t)d\lambda\,,$$

我们求解代数方程组 (4.11) 和 (4.13)，以求出量)，，(3 *tx*λ 和)，，(2 *tx*λ ，其中 $\lambda\in\mathcal{L}_1$，注意到若 $\lambda\in\mathcal{L}_1$，则 $-\lambda\ \le 0$)Im(且 0)Im($-\lambda\ \le i$ 。

同样，为了确定积分的值

$$\int_{\mathcal{L}_2}\mathfrak{G}_3(\lambda,x,t)d\lambda\ \text{ and }\int_{\mathcal{L}_2}i\lambda\mathfrak{G}_2(\lambda,x,t)d\lambda\,,$$

我们求解代数方程组 (4.11) 和 (4.12)，以求出量)，，(3 *tx*λ 和)，，(2 *tx*λ ，其中 $\lambda\in\mathcal{L}_2$，注意到若 $\lambda\in\mathcal{L}_2$，则 $-\lambda\ \le 0$)Im(和 0)Im($\lambda\ \le i$ 。

求解 (4.11)&(4.13) 中的方程组，以求 $\lambda\in\mathcal{L}_1$。由于未知量的系数行列式为

$$\det\begin{bmatrix}1 & -i\lambda\\ 1 & \lambda\end{bmatrix}=\lambda(1+i)\,,$$

我们有， $\lambda\in\mathcal{L}_1$,

$$\mathfrak{G}_3(\lambda,x,t)=\frac{1}{1+i}\begin{bmatrix}e^{i\lambda x}\hat{u}(-\lambda,t)-e^{i\lambda x-\Omega(\lambda,t)}\hat{u}_0(-\lambda)+\lambda^2\mathfrak{G}_1(\lambda,x,t)-i\lambda^3\mathfrak{G}_0(\lambda,x,t)-e^{i\lambda x-\Omega(\lambda,t)}\widetilde{\hat{f}}(\Omega(\lambda,t),-\lambda,t) & -i\\ e^{i\lambda x}\hat{u}(-i\lambda,t)-e^{i\lambda x-\Omega(\lambda,t)}\hat{u}_0(-i\lambda)-\lambda^2\mathfrak{G}_1(\lambda,x,t)-\lambda^3\mathfrak{G}_0(\lambda,x,t)-e^{i\lambda x-\Omega(\lambda,t)}\widetilde{\hat{f}}(\Omega(\lambda,t),-i\lambda,t) & 1\end{bmatrix}$$

and

$$i\lambda \mathfrak{G}_2(\lambda,x,t)=\frac{i}{1+i}\begin{bmatrix}1 & e^{i\lambda x}\hat{u}(-\lambda,t)-e^{i\lambda x-\Omega(\lambda,t)}\hat{u}_0(-\lambda)+\lambda^2\mathfrak{G}_1(\lambda,x,t)-i\lambda^3\mathfrak{G}_0(\lambda,x,t)-e^{i\lambda x-\Omega(\lambda,t)}\widetilde{\hat{f}}(\Omega(\lambda,t),-\lambda,t)\\ 1 & e^{i\lambda x}\hat{u}(-i\lambda,t)-e^{i\lambda x-\Omega(\lambda,t)}\hat{u}_0(-i\lambda)-\lambda^2\mathfrak{G}_1(\lambda,x,t)-\lambda^3\mathfrak{G}_0(\lambda,x,t)-e^{i\lambda x-\Omega(\lambda,t)}\widetilde{\hat{f}}(\Omega(\lambda,t),-i\lambda,t)\end{bmatrix}.$$

因此，请记住

$$\int_{\mathcal{L}_1} e^{i\lambda x}\hat{u}(-\lambda,t)d\lambda=0 \text{ and } \int_{\mathcal{L}_1} e^{i\lambda x}\hat{u}(-i\lambda,t)d\lambda=0,$$

我们得到

$$\begin{aligned}(4.14)\quad \int_{\mathcal{L}_1}\mathfrak{G}_3(\lambda,x,t)d\lambda &=-\frac{1}{1+i}\int_{\mathcal{L}_1}e^{i\lambda x-\Omega(\lambda,t)}[\hat{u}_0(-\lambda)+i\hat{u}_0(-i\lambda)]d\lambda\\ &+\frac{1}{1+i}\int_{\mathcal{L}_1}[(1-i)\lambda^2\mathfrak{G}_1(\lambda,x,t)-2\lambda^3\mathfrak{G}_0(\lambda,x,t)]d\lambda-\frac{1}{1+i}\int_{\mathcal{L}_1}e^{i\lambda x-\Omega(\lambda,t)}[\widetilde{\hat{f}}(\Omega(\lambda,t),-\lambda,t)+i\widetilde{\hat{f}}(\Omega(\lambda,t),-i\lambda,t)]d\lambda\end{aligned}$$

and

$$\begin{aligned}(4.15)\quad \int_{\mathcal{L}_1} i\lambda\mathfrak{G}_2(\lambda,x,t)d\lambda &=\frac{i}{1+i}\int_{\mathcal{L}_1}e^{i\lambda x-\Omega(\lambda,t)}[\hat{u}_0(-\lambda)-\hat{u}_0(-i\lambda)]d\lambda\\ &-\frac{i}{1+i}\int_{\mathcal{L}_1}[2\lambda^2\mathfrak{G}_1(\lambda,x,t)+(1-i)\lambda^3\mathfrak{G}_0(\lambda,x,t)]d\lambda+\frac{i}{1+i}\int_{\mathcal{L}_1}e^{i\lambda x-\Omega(\lambda,t)}[\widetilde{\hat{f}}(\Omega(\lambda,t),-\lambda,t)-\widetilde{\hat{f}}(\Omega(\lambda,t),-i\lambda,t)]d\lambda.\end{aligned}$$

求解该方程组　　的(4.11)&(4.12)，对于 $\lambda\in\mathcal{L}_2$ 未知量系数的行列式 i　　s

$$\det\begin{bmatrix}1 & -i\lambda\\ 1 & -\lambda\end{bmatrix}=\lambda(-1+i),$$

并且，对于 $\lambda\in\mathcal{L}_2$，我们有

$$\mathfrak{G}_3(\lambda,x,t)=\frac{1}{-1+i}\begin{bmatrix}e^{i\lambda x}\hat{u}(-\lambda,t)-e^{i\lambda x-\Omega(\lambda,t)}\hat{u}_0(-\lambda)+\lambda^2\mathfrak{G}_1(\lambda,x,t)-i\lambda^3\mathfrak{G}_0(\lambda,x,t)-e^{i\lambda x-\Omega(\lambda,t)}\widetilde{\hat{f}}(\Omega(\lambda,t),-\lambda,t) & -i\\ e^{i\lambda x}\hat{u}(i\lambda,t)-e^{i\lambda x-\Omega(\lambda,t)}\hat{u}_0(i\lambda)-\lambda^2\mathfrak{G}_1(\lambda,x,t)+\lambda^3\mathfrak{G}_0(\lambda,x,t)-e^{i\lambda x-\Omega(\lambda,t)}\widetilde{\hat{f}}(\Omega(\lambda,t),i\lambda,t) & -1\end{bmatrix}$$

and

$$i\lambda\mathfrak{G}_2(\lambda,x,t)=\frac{i}{-1+i}\begin{bmatrix}1 & e^{i\lambda x}\hat{u}(-\lambda,t)-e^{i\lambda x-\Omega(\lambda,t)}\hat{u}_0(-\lambda)+\lambda^2\mathfrak{G}_1(\lambda,x,t)-i\lambda^3\mathfrak{G}_0(\lambda,x,t)-e^{i\lambda x-\Omega(\lambda,t)}\widetilde{\hat{f}}(\Omega(\lambda,t),-\lambda,t)\\ 1 & e^{i\lambda x}\hat{u}(i\lambda,t)-e^{i\lambda x-\Omega(\lambda,t)}\hat{u}_0(i\lambda)-\lambda^2\mathfrak{G}_1(\lambda,x,t)+\lambda^3\mathfrak{G}_0(\lambda,x,t)-e^{i\lambda x-\Omega(\lambda,t)}\widetilde{\hat{f}}(\Omega(\lambda,t),i\lambda,t)\end{bmatrix}.$$

此外，

$$\int_{\mathcal{L}_2} e^{i\lambda x}\hat{u}(-\lambda,t)d\lambda=0 \text{ and } \int_{\mathcal{L}_2} e^{i\lambda x}\hat{u}(i\lambda,t)d\lambda=0,$$

因此，

$$\begin{aligned}(4.16)\quad \int_{\mathcal{L}_2}\mathfrak{G}_3(\lambda,x,t)d\lambda &=\frac{1}{-1+i}\int_{\mathcal{L}_2}e^{i\lambda x-\Omega(\lambda,t)}[\hat{u}_0(-\lambda)-i\hat{u}_0(i\lambda)]d\lambda\\ &+\frac{1}{-1+i}\int_{\mathcal{L}_2}[-(1+i)\lambda^2\mathfrak{G}_1(\lambda,x,t)+2i\lambda^3\mathfrak{G}_0(\lambda,x,t)]d\lambda+\frac{1}{-1+i}\int_{\mathcal{L}_2}e^{i\lambda x-\Omega(\lambda,t)}[\widetilde{\hat{f}}(\Omega(\lambda,t),-\lambda,t)-i\widetilde{\hat{f}}(\Omega(\lambda,t),i\lambda,t)]d\lambda\end{aligned}$$

and

$$(4.17)\quad \int_{\mathcal{L}_2} i\lambda\mathfrak{G}_2(\lambda,x,t)d\lambda=\frac{i}{-1+i}\int_{\mathcal{L}_2}e^{i\lambda x-\Omega(\lambda,t)}[\hat{u}_0(-\lambda)-\hat{u}_0(i\lambda)]d\lambda$$

$$-\frac{i}{-1+i}\int_{\mathcal{L}_2}[2\lambda^2\mathfrak{G}_1(\lambda,x,t)-(1+i)\lambda^3\mathfrak{G}_0(\lambda,x,t)]d\lambda+\frac{i}{-1+i}\int_{\mathcal{L}_2}e^{i\lambda x-\Omega(\lambda,t)}[\widetilde{\hat{f}}(\Omega(\lambda,t),-\lambda,t)-\widetilde{\hat{f}}(\Omega(\lambda,t),i\lambda,t)]d\lambda\,.$$

最后，将 (4.14)、(4.15)、4.16) 和 (4.17) 代入 (4.10)，得到问题 3 的解公式。

5. The operator $\partial_t+\alpha\partial_{xxxxt}-\beta(t)\partial_{xx}$

问题***4*** 求解

$$\begin{cases}\partial_t u=-\alpha\partial_{xxxxt}u+\beta(t)\partial_{xx}u+f(x,t),\ (x,t)\in\mathbb{R}^+\times\mathbb{R}^+,\\ u(x,0)=u_0(x),\ x\in\mathbb{R}^+,\\ u(0,t)=g_0(t),\ t\in\mathbb{R}^+,\\ u_x(0,t)=g_1(t),\ t\in\mathbb{R}^+,\end{cases}\tag{5.1}$$

对于 $),(txu$ 。

解的推导 采用前文各节中的记号，进行傅里叶变换并分部积分后，我们看到，(5.1) 中的微分方程给出：对于 $\lambda\in\mathbb{C}$ 且 $0\text{Im}\,\lambda\le$ ，

$$\frac{\partial}{\partial t}[\hat{u}(\lambda,t)]+\alpha\left\{\lambda^4\frac{\partial}{\partial t}[\hat{u}(\lambda,t)]-g'_3(t)-i\lambda g'_2(t)-(i\lambda)^2g'_1(t)-(i\lambda)^3g'_0(t)\right\}$$
$$+\beta(t)[\lambda^2\hat{u}(\lambda,t)+g_1(t)+i\lambda g_0(t)]=\hat{f}(\lambda,t)\,,$$

$\Rightarrow$

$$(1+\alpha\lambda^4)\frac{\partial}{\partial t}[\hat{u}(\lambda,t)]+\beta(t)\lambda^2\hat{u}(\lambda,t)=\alpha[g'_3(t)+i\lambda g'_2(t)-\lambda^2g'_1(t)-i\lambda^3g'_0(t)]-\beta(t)[g_1(t)+i\lambda g_0(t)]+\hat{f}(\lambda,t)$$

$\Rightarrow$

$$\frac{\partial}{\partial t}[\hat{u}(\lambda,t)]+\frac{\beta(t)\lambda^2}{1+\alpha\lambda^4}\hat{u}(\lambda,t)=\frac{\alpha g'_3(t)}{1+\alpha\lambda^4}+i\lambda\frac{\alpha g'_2(t)}{1+\alpha\lambda^4}$$
$$-\frac{1}{1+\alpha\lambda^4}\{\alpha[\lambda^2g'_1(t)+i\lambda^3g'_0(t)]+\beta(t)[g_1(t)+i\lambda g_0(t)]\}+\frac{1}{1+\alpha\lambda^4}\hat{f}(\lambda,t)$$

$\Rightarrow$

$$\frac{\partial}{\partial t}[\hat{u}(\lambda,t)]+\frac{\beta(t)\lambda^2}{1+\alpha\lambda^4}\hat{u}(\lambda,t)=\frac{\alpha g'_3(t)}{1+\alpha\lambda^4}+i\lambda\frac{\alpha g'_2(t)}{1+\alpha\lambda^4}-\frac{G(\lambda,t)}{1+\alpha\lambda^4}+\frac{1}{1+\alpha\lambda^4}\hat{f}(\lambda,t)\,,\tag{5.2}$$

其中我们令

$$G(\lambda,t):=\alpha[\lambda^2g'_1(t)+i\lambda^3g'_0(t)]+\beta(t)[g_1(t)+i\lambda g_0(t)]\,.$$

此外，(5.2) 可写为

$$\frac{\partial}{\partial t}[e^{\Omega(\lambda,t)}\hat{u}(\lambda,t)]=e^{\Omega(\lambda,t)}\frac{\alpha g'_3(t)}{1+\alpha\lambda^4}+i\lambda e^{\Omega(\lambda,t)}\frac{\alpha g'_2(t)}{1+\alpha\lambda^4}-e^{\Omega(\lambda,t)}\frac{G(\lambda,t)}{1+\alpha\lambda^4}+\frac{e^{\Omega(\lambda,t)}}{1+\alpha\lambda^4}\hat{f}(\lambda,t)\,,\tag{5.3}$$

其中

$$\omega(\lambda,t)=\frac{\beta(t)\lambda^2}{1+\alpha\lambda^4}\ \text{ and }\ \Omega(\lambda,t)=\int_{\tau=0}^{t}\omega(\lambda,\tau)d\tau=\int_{\tau=0}^{t}\frac{\beta(\tau)\lambda^2}{1+\alpha\lambda^4}d\tau=\frac{\lambda^2}{1+\alpha\lambda^4}\int_{\tau=0}^{t}\beta(\tau)d\tau\,.$$

对 (5.3) 积分，得到

$$e^{\Omega(\lambda,t)}\hat{u}(\lambda,t)=\hat{u}_0(\lambda)+\frac{\alpha}{1+\alpha\lambda^4}\int_{\tau=0}^{t}e^{\Omega(\lambda,\tau)}g'_3(\tau)d\tau+\frac{\alpha i\lambda}{1+\alpha\lambda^4}\int_{\tau=0}^{t}e^{\Omega(\lambda,\tau)}g'_2(\tau)d\tau$$

$$-\frac{1}{1+\alpha\lambda^4}\int_{\tau=0}^{t} e^{\Omega(\lambda,\tau)}G(\lambda,\tau)d\tau+\int_{\tau=0}^{t}\frac{e^{\Omega(\lambda,t)}}{1+\alpha\lambda^4}\hat{f}(\lambda,t)d\tau,$$

或者，等价地,

$$\text{(5.4)}\quad \hat{u}(\lambda,t)=e^{-\Omega(\lambda,t)}\hat{u}_0(\lambda)+\frac{\alpha}{1+\alpha\lambda^4}e^{-\Omega(\lambda,t)}(g'_3\,\widetilde{)}(\Omega,t)+\frac{\alpha i\lambda}{1+\alpha\lambda^4}e^{-\Omega(\lambda,t)}(g'_2\,\widetilde{)}(\Omega,t)$$
$$-\frac{e^{-\Omega(\lambda,t)}}{1+\alpha\lambda^4}\widetilde{G}(\Omega,\lambda,t)+\frac{e^{-\Omega(\lambda,t)}}{1+\alpha\lambda^4}\widetilde{\hat{f}}(\Omega,\lambda,t),$$

where

$$(g'_3\,\widetilde{)}(\Omega,t)=(g'_3\,\widetilde{)}(\Omega(\lambda,t),t):=\int_{\tau=0}^{t}e^{\Omega(\lambda,\tau)}g'_3(\tau)d\tau,\quad (g'_2\,\widetilde{)}(\Omega,t)=(g'_2\,\widetilde{)}(\Omega(\lambda,t),t):=\int_{\tau=0}^{t}e^{\Omega(\lambda,\tau)}g'_2(\tau)d\tau,$$

$$\widetilde{G}(\Omega(\lambda,t),\lambda,t)=\widetilde{G}(\Omega,\lambda,t):=\int_{\tau=0}^{t}e^{\Omega(\lambda,\tau)}G(\lambda,\tau)d\tau\ \text{ and }\ \widetilde{\hat{f}}(\Omega(\lambda,t),\lambda,t)=\widetilde{\hat{f}}(\Omega,\lambda,t):=\int_{\tau=0}^{t}e^{\Omega(\lambda,t)}\hat{f}(\lambda,t)d\tau.$$

将 (5.4) 乘以 $e^{i\lambda x}$ 并积分，我们得到

$$\text{(5.5)}\quad 2\pi u(x,t)=\int_{-\infty}^{\infty}e^{i\lambda x}\hat{u}(\lambda,t)d\lambda=\int_{-\infty}^{\infty}e^{i\lambda x-\Omega(\lambda,t)}\hat{u}_0(\lambda)d\lambda$$
$$+\alpha\int_{-\infty}^{\infty}\frac{e^{i\lambda x-\Omega(\lambda,t)}}{1+\alpha\lambda^4}(g'_3\,\widetilde{)}(\Omega,t)d\lambda+\alpha i\int_{-\infty}^{\infty}\frac{\lambda e^{i\lambda x-\Omega(\lambda,t)}}{1+\alpha\lambda^4}(g'_2\,\widetilde{)}(\Omega,t)d\lambda$$
$$-\int_{-\infty}^{\infty}\frac{e^{i\lambda x-\Omega(\lambda,t)}}{1+\alpha\lambda^4}\widetilde{G}(\Omega,\lambda,t)d\lambda+\int_{-\infty}^{\infty}\frac{e^{i\lambda x-\Omega(\lambda,t)}}{1+\alpha\lambda^4}\widetilde{\hat{f}}(\Omega,\lambda,t)d\lambda.$$

Next, observing that

$$1+\alpha\lambda^4=0\ \Rightarrow\ \lambda=\pm e^{i\pi/4}/\sqrt[4]{\alpha}\ \text{ or }\ \lambda=\pm e^{i3\pi/4}/\sqrt[4]{\alpha},$$

我们考虑这些数

$$\lambda_1:=e^{i\pi/4}/\sqrt[4]{\alpha}\ \text{ and }\ \lambda_2:=e^{i3\pi/4}/\sqrt[4]{\alpha}.$$

将 (5.5) 中涉及以下量的积分路径变形：$(g'_3\,\widetilde{)}(\Omega,t)$、$(g'_2\,\widetilde{)}(\Omega,t)$ 和 $\widetilde{G}(\Omega,\lambda,t)$，我们得到

$$\text{(5.6)}\quad 2\pi u(x,t)=\int_{-\infty}^{\infty}e^{i\lambda x-\Omega(\lambda,t)}\hat{u}_0(\lambda)d\lambda$$
$$+\alpha\int_{C_1+C_2}\frac{e^{i\lambda x-\Omega(\lambda,t)}}{1+\alpha\lambda^4}(g'_3\,\widetilde{)}(\Omega,t)d\lambda+\alpha i\int_{C_1+C_2}\frac{\lambda e^{i\lambda x-\Omega(\lambda,t)}}{1+\alpha\lambda^4}(g'_2\,\widetilde{)}(\Omega,t)d\lambda$$
$$-\int_{C_1+C_2}\frac{e^{i\lambda x-\Omega(\lambda,t)}}{1+\alpha\lambda^4}\widetilde{G}(\Omega,\lambda,t)d\lambda+\int_{-\infty}^{\infty}\frac{e^{i\lambda x-\Omega(\lambda,t)}}{1+\alpha\lambda^4}\widetilde{\hat{f}}(\Omega,\lambda,t)d\lambda,$$

wher积分路径 1 和C2 是简单闭曲线，分别围绕点 λ_1 和 λ_2，如图所示。 5.

平面$i\lambda = \xi + \eta -$

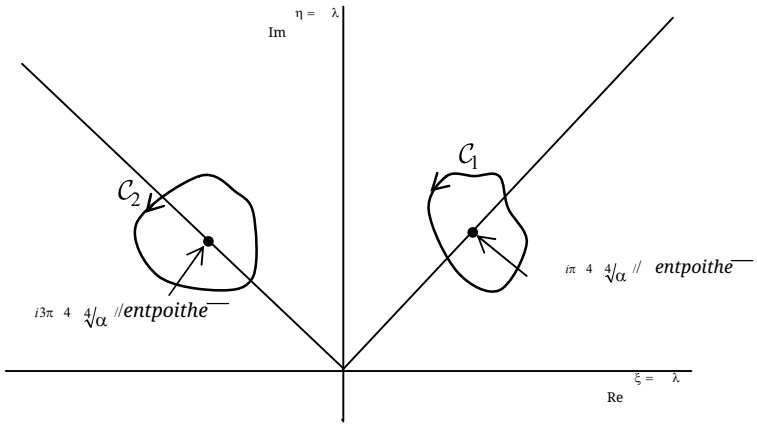

图 5 积分路径 1 和 2 的选取$\mathcal{C}$ $\mathcal{C}$

为了完成解的构造，我们必须计算式（5.6）中的积分，这些积分包含),()~'(3 $tg\Omega$ 和),()~'(2 $tg\Omega$，并用数据表示。为此，我们首先求解方程

$$\frac{[\sigma(\lambda)]^2}{1+\alpha[\sigma(\lambda)]^4} = \frac{\lambda^2}{1+\alpha\lambda^4}$$

对于)(σ λ，我们得到

$$\sigma_0(\lambda) = \lambda\,,\ \sigma_1(\lambda) = -\lambda\,,\ \sigma_2(\lambda) = 1/(\lambda\sqrt{\alpha})\,,\ \sigma_3(\lambda) = -1/(\lambda\sqrt{\alpha})\,.$$

对于这些函数，我们有

$$\omega(\sigma_j(\lambda),t) = \omega(\lambda,t) \ \text{ and } \ \Omega(\sigma_j(\lambda),t) = \Omega(\lambda,t)\,,\ j = 0,1,2,3\,.$$

此外，我们观察到

$$\sigma_1(\lambda_1) = -\lambda_1\,,\ \sigma_1(\lambda_2) = -\lambda_2\,,\ \sigma_2(\lambda_1) = \frac{e^{-i\pi/4}}{\sqrt{\alpha}} \ \text{ and } \ \sigma_2(\lambda_2) = \frac{e^{-i3\pi/4}}{\sqrt{\alpha}}\,.$$

因此，

$$\mathrm{Im}\sigma_1(\lambda_1) < 0\,,\ \sigma_1(\lambda_2) < 0\,,\ \sigma_2(\lambda_1) < 0\,,\ \text{and } \sigma_2(\lambda_2) < 0\,.$$

并且，因此，(5.4) 可推出

$$\text{(5.7)}\quad \hat{u}(-\lambda,t) = e^{-\Omega(\lambda,t)}\hat{u}_0(-\lambda) + \frac{\alpha}{1+\alpha\lambda^4}e^{-\Omega(\lambda,t)}(g'_3\,\tilde{)}(\Omega,t) - \frac{\alpha i\lambda}{1+\alpha\lambda^4}e^{-\Omega(\lambda,t)}(g'_2\,\tilde{)}(\Omega,t)$$
$$-\frac{e^{-\Omega(\lambda,t)}}{1+\alpha\lambda^4}\tilde{G}(\Omega,-\lambda,t) + \frac{e^{-\Omega(\lambda,t)}}{1+\alpha\lambda^4}\tilde{\hat{f}}(\Omega,-\lambda,t)\,,\ \text{for } \lambda \in \mathcal{C}(\lambda_1)\cup\mathcal{C}(\lambda_2)\,,$$

and

$$\text{(5.8)}\quad \hat{u}(1/(\lambda\sqrt{\alpha}),t) = e^{-\Omega(\lambda,t)}\hat{u}_0(1/(\lambda\sqrt{\alpha})) + \frac{\alpha^2\lambda^4}{1+\alpha\lambda^4}e^{-\Omega(\lambda,t)}(g'_3\,\tilde{)}(\Omega,t) + \frac{\alpha^2 i\lambda^4}{1+\alpha\lambda^4}e^{-\Omega(\lambda,t)}(g'_2\,\tilde{)}(\Omega,t)$$
$$-\frac{\alpha\lambda^4}{1+\alpha\lambda^4}e^{-\Omega(\lambda,t)}\tilde{G}(\Omega,1/(\lambda\sqrt{\alpha}),t) + \frac{\alpha\lambda^4}{1+\alpha\lambda^4}e^{-\Omega(\lambda,t)}\tilde{\hat{f}}(\Omega,1/(\lambda\sqrt{\alpha}),t)\,,\ \text{for } \lambda \in \mathcal{C}(\lambda_1)\cup\mathcal{C}(\lambda_2)\,.$$

(注意 函数)/(σ3 λ =−1 λ√α)(对我们的目的毫无用处，因为 σ λ =− −π 4 √α /)(/ 13 ie且 σ3 λ2 =− −3π 4 √α /)(/ie，因此 σ3 λ1 >0)(Im 且 0)(Im σ3 λ2 >.)

接下来，我们求解代数方程组 (5.7)&(5.8)，得到未知量

$$\frac{\alpha}{1+\alpha\lambda^4}e^{-\Omega(\lambda,t)}(g'_3\,\widetilde{)}(\Omega,t) \text{ and } \frac{\alpha}{1+\alpha\lambda^4}e^{-\Omega(\lambda,t)}(g'_2\,\widetilde{)}(\Omega,t), \text{ with } \lambda\in\mathcal{C}(\lambda_1)\cup\mathcal{C}(\lambda_2).$$

计算未知量的系数所构成的行列式，即

$$\det\begin{bmatrix}1 & -i\lambda\\ \alpha\lambda^4 & \alpha i\lambda^4\end{bmatrix}=\alpha i\lambda^4(1+\lambda),$$

我们发现，对于)()($\lambda\in\mathcal{C}\,\lambda_1\,\cup\mathcal{C}\,\lambda_2$,

(5.9)),()$\frac{\alpha}{1+\alpha\lambda^4}$ $^{-\Omega\,\lambda}$ $_3\,\widetilde{}\,\Omega$ '( )(

tge t

$$=\frac{1}{\alpha i\lambda^4(1+\lambda)}\det\begin{bmatrix}\hat{u}(-\lambda,t)-e^{-\Omega(\lambda,t)}\hat{u}_0(-\lambda)+\dfrac{e^{-\Omega(\lambda,t)}}{1+\alpha\lambda^4}\widetilde{G}(\Omega,-\lambda,t)-\dfrac{e^{-\Omega(\lambda,t)}}{1+\alpha\lambda^4}\widetilde{\hat{f}}(\Omega,-\lambda,t) & -i\lambda\\ \hat{u}(1/(\lambda\sqrt{\alpha}),t)-e^{-\Omega(\lambda,t)}\hat{u}_0(1/(\lambda\sqrt{\alpha}))+\dfrac{\alpha\lambda^4e^{-\Omega(\lambda,t)}}{1+\alpha\lambda^4}[\widetilde{G}(\Omega,1/(\lambda\sqrt{\alpha}),t)-\widetilde{\hat{f}}(\Omega,1/(\lambda\sqrt{\alpha}),t)] & \alpha i\lambda^4\end{bmatrix}$$

and

(5.10) $\frac{\alpha}{1+\alpha\lambda^4}e^{-\Omega(\lambda,t)}(g'_2\,\widetilde{)}(\Omega,t)$

$$=\frac{1}{\alpha i\lambda^4(1+\lambda)}\det\begin{bmatrix}1 & \hat{u}(-\lambda,t)-e^{-\Omega(\lambda,t)}\hat{u}_0(-\lambda)+\dfrac{e^{-\Omega(\lambda,t)}}{1+\alpha\lambda^4}\widetilde{G}(\Omega,-\lambda,t)-\dfrac{e^{-\Omega(\lambda,t)}}{1+\alpha\lambda^4}\widetilde{\hat{f}}(\Omega,-\lambda,t)\\ \alpha i\lambda^4 & \hat{u}(1/(\lambda\sqrt{\alpha}),t)-e^{-\Omega(\lambda,t)}\hat{u}_0(1/(\lambda\sqrt{\alpha}))+\dfrac{\alpha\lambda^4e^{-\Omega(\lambda,t)}}{1+\alpha\lambda^4}[\widetilde{G}(\Omega,1/(\lambda\sqrt{\alpha}),t)-\widetilde{\hat{f}}(\Omega,1/(\lambda\sqrt{\alpha}),t)]\end{bmatrix}.$$

将 (5.9) 和 (5.10) 代入 (5.6)，并考虑到

$$\int_{\mathcal{C}_1+\mathcal{C}_2}\frac{1}{\lambda+1}e^{i\lambda x}\hat{u}(-\lambda,t)d\lambda=0,\ \int_{\mathcal{C}_1+\mathcal{C}_2}\frac{\lambda}{\lambda+1}e^{i\lambda x}\hat{u}(-\lambda,t)d\lambda=0,\ \int_{\mathcal{C}_1+\mathcal{C}_2}e^{i\lambda x}\frac{1}{\lambda^3(1+\lambda)}\hat{u}(1/(\lambda\sqrt{\alpha}),t)d\lambda=0,$$

我们得到问题4的解的公式:

$$(5.11)\quad 2\pi u(x,t)=\int_{-\infty}^{\infty}e^{i\lambda x-\Omega(\lambda,t)}\hat{u}_0(\lambda)d\lambda-\int_{\mathcal{C}_1+\mathcal{C}_2}\frac{1-i\lambda}{1+\lambda}e^{i\lambda x-\Omega(\lambda,t)}\hat{u}_0(-\lambda)d\lambda\ -\frac{2}{\alpha}\int_{\mathcal{C}_1+\mathcal{C}_2}\frac{e^{i\lambda x-\Omega(\lambda,t)}}{\lambda^3(1+\lambda)}\hat{u}_0(1/(\lambda\sqrt{\alpha}))d\lambda$$

$$-\int_{\mathcal{C}_1+\mathcal{C}_2}\frac{e^{i\lambda x-\Omega(\lambda,t)}}{1+\alpha\lambda^4}\widetilde{G}(\Omega,\lambda,t)d\lambda+\int_{\mathcal{C}_1+\mathcal{C}_2}\frac{1-i\lambda}{1+\lambda}\frac{e^{i\lambda x-\Omega(\lambda,t)}}{1+\alpha\lambda^4}\widetilde{G}(\Omega,-\lambda,t)d\lambda+\int_{\mathcal{C}_1+\mathcal{C}_2}\frac{2\lambda}{1+\lambda}\frac{e^{i\lambda x-\Omega(\lambda,t)}}{1+\alpha\lambda^4}\widetilde{G}(\Omega,1/(\lambda\sqrt{\alpha}),t)d\lambda$$

$$+\int_{-\infty}^{\infty}\frac{e^{i\lambda x-\Omega(\lambda,t)}}{1+\alpha\lambda^4}\widetilde{\hat{f}}(\Omega,\lambda,t)d\lambda-\int_{\mathcal{C}_1+\mathcal{C}_2}\frac{1-i\lambda}{1+\lambda}\frac{e^{i\lambda x-\Omega(\lambda,t)}}{1+\alpha\lambda^4}\widetilde{\hat{f}}(\Omega,-\lambda,t)d\lambda-\int_{\mathcal{C}_1+\mathcal{C}_2}\frac{2\lambda}{1+\lambda}\frac{e^{i\lambda x-\Omega(\lambda,t)}}{1+\alpha\lambda^4}\widetilde{\hat{f}}(\Omega,1/(\lambda\sqrt{\alpha}),t)d\lambda d\lambda.$$

6. 算子 $_{xxxx}$ $_{xxt}$ $_{xxxxt}$ $_t$ $_t$
$\partial+\alpha\partial$ $-\beta\partial$ $+\gamma$ $\partial)($"

问题***5*** 求解

$$(6.1)\qquad\begin{cases}\partial_t u=-\alpha\partial_{xxxxt}u+\beta\partial_{xxt}u-\gamma(t)\partial_{xxxx}u+f(x,t),\ (x,t)\in\mathbb{R}^+\times\mathbb{R}^+,\\ u(x,0)=u_0(x),\ x\in\mathbb{R}^+,\\ u(0,t)=g_0(t),\ t\in\mathbb{R}^+,\\ u_x(0,t)=g_1(t),\ t\in\mathbb{R}^+,\end{cases}$$

对于),(*txu*。

解的推导 与前几节一样，我们看到，对于 $\lambda \in \mathbb{C}$ 且 0Im $\lambda \leq$，(6.1) 中的微分方程可得

$$(1+\beta\lambda^2+\alpha\lambda^4)\frac{\partial}{\partial t}[\hat{u}(\lambda,t)]+\gamma(t)\lambda^4\hat{u}(\lambda,t)=\alpha[g'_3(t)+i\lambda g'_2(t)-\lambda^2 g'_1(t)-i\lambda^3 g'_0(t)]$$
$$-\beta[g'_1(t)+i\lambda g'_0(t)]+\gamma(t)[g_3(t)+i\lambda g_2(t)-\lambda^2 g_1(t)-i\lambda^3 g_0(t)]+\hat{f}(\lambda,t)$$

$\Rightarrow$

$$\frac{\partial}{\partial t}[\hat{u}(\lambda,t)]+\frac{\gamma(t)\lambda^4}{1+\beta\lambda^2+\alpha\lambda^4}\hat{u}(\lambda,t)=\frac{\alpha}{1+\beta\lambda^2+\alpha\lambda^4}[g'_3(t)+i\lambda g'_2(t)-\lambda^2 g'_1(t)-i\lambda^3 g'_0(t)]$$
$$-\frac{\beta}{1+\beta\lambda^2+\alpha\lambda^4}[g'_1(t)+i\lambda g'_0(t)]+\frac{\gamma(t)}{1+\beta\lambda^2+\alpha\lambda^4}[g_3(t)+i\lambda g_2(t)-\lambda^2 g_1(t)-i\lambda^3 g_0(t)]+\frac{\hat{f}(\lambda,t)}{1+\beta\lambda^2+\alpha\lambda^4}$$

$\Rightarrow$

(6.2) $$\frac{\partial}{\partial t}[\hat{u}(\lambda,t)]+\frac{\gamma(t)\lambda^4}{1+\beta\lambda^2+\alpha\lambda^4}\hat{u}(\lambda,t)$$
$$=\frac{1}{1+\beta\lambda^2+\alpha\lambda^4}[\alpha g'_3(t)+\gamma(t)g_3(t)]+\frac{i\lambda}{1+\beta\lambda^2+\alpha\lambda^4}[\alpha g'_2(t)+\gamma(t)g_2(t)]$$
$$+\frac{G(\lambda,t)}{1+\beta\lambda^2+\alpha\lambda^4}+\frac{\hat{f}(\lambda,t)}{1+\beta\lambda^2+\alpha\lambda^4},$$

where we have set

$$G(\lambda,t):=-\alpha[\lambda^2 g'_1(t)+i\lambda^3 g'_0(t)]-\beta[g'_1(t)+i\lambda g'_0(t)]-\gamma(t)[\lambda^2 g_1(t)+i\lambda^3 g_0(t)]$$
$$=-(\alpha\lambda^2+\beta)g'_1(t)-i\lambda(\alpha\lambda^2+\beta)g'_0(t)-\gamma(t)\lambda^2[g_1(t)+i\lambda g_0(t)].$$

此外，令

$$\omega(\lambda,t)=\frac{\gamma(t)\lambda^4}{1+\beta\lambda^2+\alpha\lambda^4},\ \ \Omega(\lambda,t)=\int_{\tau=0}^{t}\omega(\lambda,\tau)d\tau=\int_{\tau=0}^{t}\frac{\gamma(\tau)\lambda^4}{1+\beta\lambda^2+\alpha\lambda^4}d\tau=\frac{\lambda^4}{1+\beta\lambda^2+\alpha\lambda^4}\int_{\tau=0}^{t}\gamma(\tau)d\tau,$$

and

$$G_3(t)=\alpha g'_3(t)+\gamma(t)g_3(t)\ \text{ and }\ G_2(t)=\alpha g'_2(t)+\gamma(t)g_2(t),$$

我们将 (6.2) 写成如下形式:

$$\frac{\partial}{\partial t}[e^{\Omega(\lambda,t)}\hat{u}(\lambda,t)]=\frac{e^{\Omega(\lambda,t)}G_3(t)}{1+\beta\lambda^2+\alpha\lambda^4}+\frac{i\lambda e^{\Omega(\lambda,t)}G_2(t)}{1+\beta\lambda^2+\alpha\lambda^4}-\frac{e^{\Omega(\lambda,t)}G(\lambda,t)}{1+\beta\lambda^2+\alpha\lambda^4}+\frac{e^{\Omega(\lambda,t)}\hat{f}(\lambda,t)}{1+\beta\lambda^2+\alpha\lambda^4}.$$

对上述方程积分，得到

(6.3) $$e^{\Omega(\lambda,t)}\hat{u}(\lambda,t)=\hat{u}_0(\lambda)+\int_{\tau=0}^{t}\frac{e^{\Omega(\lambda,\tau)}G_3(\tau)}{1+\beta\lambda^2+\alpha\lambda^4}d\tau+\int_{\tau=0}^{t}\frac{i\lambda e^{\Omega(\lambda,\tau)}G_2(\tau)}{1+\beta\lambda^2+\alpha\lambda^4}d\tau$$
$$+\int_{\tau=0}^{t}\frac{e^{\Omega(\lambda,\tau)}G(\lambda,\tau)}{1+\beta\lambda^2+\alpha\lambda^4}d\tau+\int_{\tau=0}^{t}\frac{e^{\Omega(\lambda,\tau)}\hat{f}(\lambda,\tau)}{1+\beta\lambda^2+\alpha\lambda^4}d\tau.$$

定义 ng

$$\widetilde{G}_3(\Omega(\lambda,t),t)=\int_{\tau=0}^{t}e^{\Omega(\lambda,\tau)}G_3(\tau)d\tau,\ \widetilde{G}_2(\Omega(\lambda,t),t)=\int_{\tau=0}^{t}e^{\Omega(\lambda,\tau)}G_2(\tau)d\tau,$$

$$\widetilde{G}(\Omega(\lambda,t),\lambda,t)=\int_{\tau=0}^{t}e^{\Omega(\lambda,\tau)}G(\lambda,\tau)d\tau \text{ and } \widetilde{\hat{f}}(\Omega(\lambda,t),\lambda,t)=\int_{\tau=0}^{t}e^{\Omega(\lambda,\tau)}\hat{f}(\lambda,\tau)d\tau ,$$

我们将（6.3）写作如下:

$$(6.4)\quad \hat{u}(\lambda,t)=e^{-\Omega(\lambda,t)}\hat{u}_0(\lambda)+\frac{e^{-\Omega(\lambda,t)}}{1+\beta\lambda^2+\alpha\lambda^4}\widetilde{G}_3(\Omega(\lambda,t),t)+\frac{i\lambda e^{-\Omega(\lambda,t)}}{1+\beta\lambda^2+\alpha\lambda^4}\widetilde{G}_2(\Omega(\lambda,t),t)$$

$$+\frac{e^{-\Omega(\lambda,t)}}{1+\beta\lambda^2+\alpha\lambda^4}\widetilde{G}(\Omega(\lambda,t),\lambda,t)+\frac{e^{-\Omega(\lambda,t)}}{1+\beta\lambda^2+\alpha\lambda^4}\widetilde{\hat{f}}(\Omega(\lambda,t),\lambda,t), \text{ for } \lambda\in\mathbb{C} \text{ with } \mathrm{Im}\lambda\le 0.$$

Now (6.4) gives

$$(6.5)\quad 2\pi u(x,t)=\int_{-\infty}^{\infty}e^{i\lambda x}\hat{u}(\lambda,t)d\lambda$$

$$=\int_{-\infty}^{\infty}e^{i\lambda x-\Omega(\lambda,t)}\hat{u}_0(\lambda)d\lambda+\int_{-\infty}^{\infty}\frac{e^{i\lambda x-\Omega(\lambda,t)}}{1+\beta\lambda^2+\alpha\lambda^4}\widetilde{G}_3(\Omega(\lambda,t),t)d\lambda+\int_{-\infty}^{\infty}\frac{i\lambda e^{i\lambda x-\Omega(\lambda,t)}}{1+\beta\lambda^2+\alpha\lambda^4}\widetilde{G}_2(\Omega(\lambda,t),t)d\lambda$$

$$+\int_{-\infty}^{\infty}\frac{e^{i\lambda x-\Omega(\lambda,t)}}{1+\beta\lambda^2+\alpha\lambda^4}\widetilde{G}(\Omega(\lambda,t),\lambda,t)d\lambda+\int_{-\infty}^{\infty}\frac{e^{i\lambda x-\Omega(\lambda,t)}}{1+\beta\lambda^2+\alpha\lambda^4}\widetilde{\hat{f}}(\Omega(\lambda,t),\lambda,t)d\lambda .$$

我们继续构造问题 (6.1) 的解，假设 $4\alpha>\beta^2$。

情形 $4\alpha>\beta^2$ 在这种情形下，多项式 $\Pi\ \lambda\ =1+\beta\lambda^2+\alpha\lambda^4$:)(的零点为数值 λ_1, λ_2, $-\lambda_1$,$-\lambda_2$ ，其中

$$\lambda_1=\sqrt{\frac{-\beta+i\sqrt{4\alpha-\beta^2}}{2\alpha}} \text{ and } \lambda_2=\sqrt{\frac{-\beta-i\sqrt{4\alpha-\beta^2}}{2\alpha}} .$$

（上述平方根的选取使得 λ_1 位于平面的第一象限，而 λ_2 位于第二象限。）接下来我们看到，以下任一函数

$$\sigma(\lambda)=\pm\lambda \ \ or\ \ \pm\sqrt{\frac{-\lambda^2}{1+\beta\lambda^2}} ,$$

满足方程

$$\frac{\gamma(t)[\sigma(\lambda)]^4}{1+\beta[\sigma(\lambda)]^2+\alpha[\sigma(\lambda)]^4}=\frac{\gamma(t)\lambda^4}{1+\beta\lambda^2+\alpha\lambda^4} \text{, i.e., } \omega(\sigma(\lambda),t)=\omega(\lambda,t).$$

此外,

$$\Omega(\sigma(\lambda),t)=\Omega(\lambda,t).$$

现在，我们指定平方根，并定义函数

$$\sigma_1(\lambda):=\sqrt{\frac{-\lambda^2}{1+\beta\lambda^2}} \text{, to be analytic for } \lambda \text{ in an open neighborhood of } \lambda_1,$$

使得

$$\sigma_1(\lambda_1)=\sqrt{\frac{-\lambda_1^2}{1+\beta\lambda_1^2}}=\sqrt{\frac{-\lambda_1^2}{-\alpha\lambda_1^4}}=\frac{1}{\lambda_1\sqrt{\alpha}}.$$

同样，我们选择平方根，并定义函数

$$\sigma_2(\lambda) := \sqrt{\frac{-\lambda^2}{1+\beta\lambda^2}}\text{ , to be analytic for } \lambda \text{ in an open neighborhood of } \lambda_2,$$

使得

$$\sigma_2(\lambda_2) = \sqrt{\frac{-\lambda_2^2}{1+\beta\lambda_2^2}} = \sqrt{\frac{-\lambda_2^2}{-\alpha\lambda_2^4}} = \frac{1}{\lambda_2\sqrt{\alpha}}.$$

还要指出,

$$\Pi(\sigma_1(\lambda)) = \Pi(\sigma_2(\lambda)) = \frac{1+\beta\lambda^2+\alpha\lambda^4}{(1+\beta\lambda^2)^2} = \frac{\Pi(\lambda)}{(1+\beta\lambda^2)^2} \tag{6.6}$$

特别是，以下每个商

$$\frac{\Pi(\sigma_1(\lambda))}{\Pi(\lambda)} \text{ and } \frac{\Pi(\sigma_2(\lambda))}{\Pi(\lambda)}$$

都是λ 在λ_1 和λ_2的一个开邻域内的解析函数。

考虑图 6 所示的积分路径 1 和 2，我们将 (6.5) 写成如下形式：

$$\begin{aligned}2\pi u(x,t) = {} & \int_{-\infty}^{\infty} e^{i\lambda x-\Omega(\lambda,t)}\hat{u}_0(\lambda)d\lambda + \int_{\mathcal{C}_1}\frac{e^{i\lambda x-\Omega(\lambda,t)}}{\Pi(\lambda)}\widetilde{G}_3(\Omega(\lambda,t),t)d\lambda + \int_{\mathcal{C}_2}\frac{e^{i\lambda x-\Omega(\lambda,t)}}{\Pi(\lambda)}\widetilde{G}_3(\Omega(\lambda,t),t)d\lambda \\ & + \int_{\mathcal{C}_1}\frac{i\lambda e^{i\lambda x-\Omega(\lambda,t)}}{\Pi(\lambda)}\widetilde{G}_2(\Omega(\lambda,t),t)d\lambda + \int_{\mathcal{C}_2}\frac{i\lambda e^{i\lambda x-\Omega(\lambda,t)}}{\Pi(\lambda)}\widetilde{G}_2(\Omega(\lambda,t),t)d\lambda \\ & + \int_{\mathcal{C}_1}\frac{e^{i\lambda x-\Omega(\lambda,t)}}{\Pi(\lambda)}\widetilde{G}(\Omega(\lambda,t),\lambda,t)d\lambda + \int_{\mathcal{C}_2}\frac{e^{i\lambda x-\Omega(\lambda,t)}}{\Pi(\lambda)}\widetilde{G}(\Omega(\lambda,t),\lambda,t)d\lambda + \int_{-\infty}^{\infty}\frac{e^{i\lambda x-\Omega(\lambda,t)}}{\Pi(\lambda)}\widetilde{\hat{f}}(\Omega(\lambda,t),\lambda,t)d\lambda .\end{aligned} \tag{6.7}$$

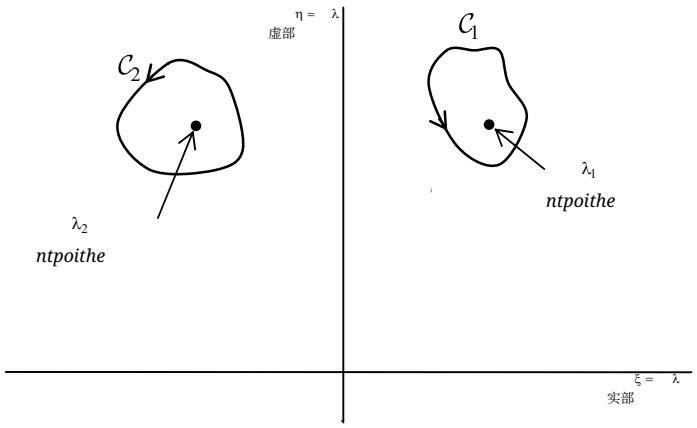

图 6 积分路径 1 和 2 的选择$\mathcal{C}$ $\mathcal{C}$

接下来，由 (6.4) 可得

$$\begin{aligned}\hat{u}(-\lambda,t) = {} & e^{-\Omega(\lambda,t)}\hat{u}_0(-\lambda) + \frac{e^{-\Omega(\lambda,t)}}{\Pi(\lambda)}\widetilde{G}_3(\Omega(\lambda,t),t) - \frac{i\lambda e^{-\Omega(\lambda,t)}}{\Pi(\lambda)}\widetilde{G}_2(\Omega(\lambda,t),t) \\ & + \frac{e^{-\Omega(\lambda,t)}}{\Pi(\lambda)}\widetilde{G}(\Omega(\lambda,t),-\lambda,t) + \frac{e^{-\Omega(\lambda,t)}}{\Pi(\lambda)}\widetilde{\hat{f}}(\Omega(\lambda,t),-\lambda,t)\text{ , for } \lambda\in\mathcal{C}_1\cup\mathcal{C}_2,\end{aligned} \tag{6.8}$$

$$(6.9)\quad \hat{u}(\sigma_1(\lambda),t)=e^{-\Omega(\lambda,t)}\hat{u}_0(\sigma_1(\lambda))+\frac{e^{-\Omega(\lambda,t)}}{\Pi(\sigma_1(\lambda))}\widetilde{G}_3(\Omega(\lambda,t),t)+\frac{i\sigma_1(\lambda)e^{-\Omega(\lambda,t)}}{\Pi(\sigma_1(\lambda))}\widetilde{G}_2(\Omega(\lambda,t),t)$$
$$+\frac{e^{-\Omega(\lambda,t)}}{\Pi(\sigma_1(\lambda))}\widetilde{G}(\Omega(\lambda,t),\sigma_1(\lambda),t)+\frac{e^{-\Omega(\lambda,t)}}{\Pi(\sigma_1(\lambda))}\widetilde{\hat{f}}(\Omega(\lambda,t),\sigma_1(\lambda),t),\ \text{for } \lambda\in\mathcal{C}_1,$$

$$(6.10)\quad \hat{u}(\sigma_2(\lambda),t)=e^{-\Omega(\lambda,t)}\hat{u}_0(\sigma_2(\lambda))+\frac{e^{-\Omega(\lambda,t)}}{\Pi(\sigma_2(\lambda))}\widetilde{G}_3(\Omega(\lambda,t),t)+\frac{i\sigma_2(\lambda)e^{-\Omega(\lambda,t)}}{\Pi(\sigma_2(\lambda))}\widetilde{G}_2(\Omega(\lambda,t),t)$$
$$+\frac{e^{-\Omega(\lambda,t)}}{\Pi(\sigma_2(\lambda))}\widetilde{G}(\Omega(\lambda,t),\sigma_2(\lambda),t)+\frac{e^{-\Omega(\lambda,t)}}{\Pi(\sigma_2(\lambda))}\widetilde{\hat{f}}(\Omega(\lambda,t),\sigma_2(\lambda),t),\ \text{for } \lambda\in\mathcal{C}_2.$$

由方程 (6.8)、(6.9) 和 (6.10)，我们将确定各个量的值

$$(6.11)\qquad e^{-\Omega(\lambda,t)}\widetilde{G}_3(\Omega(\lambda,t),t)\ \text{ and }\ e^{-\Omega(\lambda,t)}\widetilde{G}_2(\Omega(\lambda,t),t),\ \text{for } \lambda\in\mathcal{C}_1\ \text{and for } \lambda\in\mathcal{C}_2.$$

求解以下 方程组(6.8)& (6.9) 对 $\lambda\in\mathcal{C}_1$ 进行计算，我们求出未知量的行列式 (6.11)：

$$\det\begin{bmatrix}\dfrac{1}{\Pi(\lambda)} & -\dfrac{i\lambda}{\Pi(\lambda)}\\ \dfrac{1}{\Pi(\sigma_1(\lambda))} & \dfrac{i\sigma_1(\lambda)}{\Pi(\sigma_1(\lambda))}\end{bmatrix}=\frac{i[\lambda+\sigma_1(\lambda)]}{\Pi(\lambda)\Pi(\sigma_1(\lambda))}.$$

因此，

$$(6.12)\quad e^{-\Omega(\lambda,t)}\widetilde{G}_3(\Omega(\lambda,t),t)=\frac{\Pi(\lambda)\Pi(\sigma_1(\lambda))}{i[\lambda+\sigma_1(\lambda)]}\times$$
$$\times\det\begin{bmatrix}\hat{u}(-\lambda,t)-e^{-\Omega(\lambda,t)}\hat{u}_0(-\lambda)-\dfrac{e^{-\Omega(\lambda,t)}}{\Pi(\lambda)}\widetilde{G}(\Omega,-\lambda,t)-\dfrac{e^{-\Omega(\lambda,t)}}{\Pi(\lambda)}\widetilde{\hat{f}}(\Omega,-\lambda,t) & -\dfrac{i\lambda}{\Pi(\lambda)}\\ \hat{u}(\sigma_1(\lambda),t)-e^{-\Omega(\lambda,t)}\hat{u}_0(\sigma_1(\lambda))-\dfrac{e^{-\Omega(\lambda,t)}}{\Pi(\sigma_1(\lambda))}\widetilde{G}(\Omega,\sigma_1(\lambda),t)-\dfrac{e^{-\Omega(\lambda,t)}}{\Pi(\sigma_1(\lambda))}\widetilde{\hat{f}}(\Omega,\sigma_1(\lambda),t) & \dfrac{i\sigma_1(\lambda)}{\Pi(\sigma_1(\lambda))}\end{bmatrix}$$

and

$$(6.13)\quad e^{-\Omega(\lambda,t)}\widetilde{G}_2(\Omega(\lambda,t),t)=\frac{\Pi(\lambda)\Pi(\sigma_1(\lambda))}{i[\lambda+\sigma_1(\lambda)]}\times$$
$$\times\det\begin{bmatrix}\dfrac{1}{\Pi(\lambda)} & \hat{u}(-\lambda,t)-e^{-\Omega(\lambda,t)}\hat{u}_0(-\lambda)-\dfrac{e^{-\Omega(\lambda,t)}}{\Pi(\lambda)}\widetilde{G}(\Omega,-\lambda,t)-\dfrac{e^{-\Omega(\lambda,t)}}{\Pi(\lambda)}\widetilde{\hat{f}}(\Omega,-\lambda,t)\\ \dfrac{1}{\Pi(\sigma_1(\lambda))} & \hat{u}(\sigma_1(\lambda),t)-e^{-\Omega(\lambda,t)}\hat{u}_0(\sigma_1(\lambda))-\dfrac{e^{-\Omega(\lambda,t)}}{\Pi(\sigma_1(\lambda))}\widetilde{G}(\Omega,\sigma_1(\lambda),t)-\dfrac{e^{-\Omega(\lambda,t)}}{\Pi(\sigma_1(\lambda))}\widetilde{\hat{f}}(\Omega,\sigma_1(\lambda),t)\end{bmatrix}.$$

现在，至关重要的是要注意，量))„((~3),(ttGe t −Ω λ Ω λ 中),(ˆ tu −λ 的系数，因为该量由 (6.12) 给出，等于

$$\frac{\Pi(\lambda)\Pi(\sigma_1(\lambda))}{i[\lambda+\sigma_1(\lambda)]}\frac{i\sigma_1(\lambda)}{\Pi(\sigma_1(\lambda))}=\frac{\Pi(\lambda)\sigma_1(\lambda)}{\lambda+\sigma_1(\lambda)},$$

并且

$$\int_{\mathcal{C}_1} \frac{\sigma_1(\lambda)}{\lambda+\sigma_1(\lambda)} e^{i\lambda x}\hat{u}(-\lambda,t)d\lambda = 0\,.$$

同样，我们观察到，数量)),,((~3),(ttGe t −Ω λ Ω λ 中)),((ˆ 1 tu σ λ 的系数，根据（6.12），等于

$$\frac{\Pi(\lambda)\Pi(\sigma_1(\lambda))}{i[\lambda+\sigma_1(\lambda)]}\frac{i\lambda}{\Pi(\lambda)} = \frac{\lambda\Pi(\sigma_1(\lambda))}{\lambda+\sigma_1(\lambda)},$$

并且

$$\int_{\mathcal{C}_1} \frac{\lambda\Pi(\sigma_1(\lambda))}{\lambda+\sigma_1(\lambda)}\frac{1}{\Pi(\lambda)} e^{i\lambda x}\hat{u}(\sigma_1(\lambda),t)d\lambda = 0\,,$$

其中，此处我们还依赖 (6.6)，以确保商)(/))((Π σ1 λ Π λ 对于 λ 在 λ1 的一个开邻域内是解析的。

对于由这些项的存在所产生的相应积分（积分区间为 1），也可以得出类似结论，即量)),,((~2),(ttGe t −Ω λ Ω λ 中的),(ˆ tu −λ 和)),((ˆ 1 tu σ λ 。

因此，鉴于 (6.12) 和 (6.13),

$$\begin{aligned}(6.14)\quad &\int_{\mathcal{C}_1}\frac{e^{i\lambda x-\Omega(\lambda,t)}}{\Pi(\lambda)}\widetilde{G}_3(\Omega(\lambda,t),t)d\lambda\\ &= -\int_{\mathcal{C}_1}\frac{\sigma_1(\lambda)}{\lambda+\sigma_1(\lambda)}e^{i\lambda x-\Omega(\lambda,t)}\hat{u}_0(-\lambda)d\lambda - \int_{\mathcal{C}_1}\frac{\lambda}{\lambda+\sigma_1(\lambda)}\frac{\Pi(\sigma_1(\lambda))}{\Pi(\lambda)}e^{i\lambda x-\Omega(\lambda,t)}\hat{u}_0(\sigma_1(\lambda))d\lambda\\ &-\int_{\mathcal{C}_1}\frac{\sigma_1(\lambda)}{\lambda+\sigma_1(\lambda)}\frac{1}{\Pi(\lambda)}e^{i\lambda x-\Omega(\lambda,t)}\widetilde{G}(\Omega(\lambda,t),-\lambda,t)d\lambda - \int_{\mathcal{C}_1}\frac{\lambda}{\lambda+\sigma_1(\lambda)}\frac{1}{\Pi(\lambda)}e^{i\lambda x-\Omega(\lambda,t)}\widetilde{G}(\Omega(\lambda,t),\sigma_1(\lambda),t)d\lambda\\ &-\int_{\mathcal{C}_1}\frac{\sigma_1(\lambda)}{\lambda+\sigma_1(\lambda)}\frac{1}{\Pi(\lambda)}e^{i\lambda x-\Omega(\lambda,t)}\widetilde{\widetilde{f}}(\Omega(\lambda,t),-\lambda,t)d\lambda - \int_{\mathcal{C}_1}\frac{\lambda}{\lambda+\sigma_1(\lambda)}\frac{1}{\Pi(\lambda)}e^{i\lambda x-\Omega(\lambda,t)}\widetilde{\widetilde{f}}(\Omega(\lambda,t),\sigma_1(\lambda),t)d\lambda\end{aligned}$$

and

$$\begin{aligned}(6.15)\quad &\int_{\mathcal{C}_1}\frac{i\lambda e^{i\lambda x-\Omega(\lambda,t)}}{\Pi(\lambda)}\widetilde{G}_2(\Omega(\lambda,t),t)d\lambda\\ &= \int_{\mathcal{C}_1}\frac{\lambda}{\lambda+\sigma_1(\lambda)}e^{i\lambda x-\Omega(\lambda,t)}\hat{u}_0(-\lambda)d\lambda - \int_{\mathcal{C}_1}\frac{\lambda}{\lambda+\sigma_1(\lambda)}\frac{\Pi(\sigma_1(\lambda))}{\Pi(\lambda)}e^{i\lambda x-\Omega(\lambda,t)}\hat{u}_0(\sigma_1(\lambda))d\lambda\\ &+\int_{\mathcal{C}_1}\frac{\lambda}{\lambda+\sigma_1(\lambda)}\frac{1}{\Pi(\lambda)}e^{i\lambda x-\Omega(\lambda,t)}\widetilde{G}(\Omega(\lambda,t),-\lambda,t)d\lambda - \int_{\mathcal{C}_1}\frac{\lambda}{\lambda+\sigma_1(\lambda)}\frac{1}{\Pi(\lambda)}e^{i\lambda x-\Omega(\lambda,t)}\widetilde{G}(\Omega(\lambda,t),\sigma_1(\lambda),t)d\lambda\\ &+\int_{\mathcal{C}_1}\frac{\lambda}{\lambda+\sigma_1(\lambda)}\frac{1}{\Pi(\lambda)}e^{i\lambda x-\Omega(\lambda,t)}\widetilde{\widetilde{f}}(\Omega(\lambda,t),-\lambda,t)d\lambda - \int_{\mathcal{C}_1}\frac{\lambda}{\lambda+\sigma_1(\lambda)}\frac{1}{\Pi(\lambda)}e^{i\lambda x-\Omega(\lambda,t)}\widetilde{\widetilde{f}}(\Omega(\lambda,t),\sigma_1(\lambda),t)d\lambda\,.\end{aligned}$$

同样地，求解方程组 (6.8)&(6.10) 中关于 $\lambda\in\mathcal{C}_2$ 的方程，我们计算得

$$\begin{aligned}(6.16)\quad &\int_{\mathcal{C}_2}\frac{e^{i\lambda x-\Omega(\lambda,t)}}{\Pi(\lambda)}\widetilde{G}_3(\Omega(\lambda,t),t)d\lambda\\ &= \text{the } \textit{RHS} \text{ of (6.14), where, } \textit{however},\ \mathcal{C}_1 \text{ is replaced by } \mathcal{C}_2 \text{ and } \sigma_1(\lambda) \text{ is replaced by } \sigma_2(\lambda)\,,\end{aligned}$$

and

$$(6.17)\quad \int_{\mathcal{C}_2}\frac{i\lambda e^{i\lambda x-\Omega(\lambda,t)}}{\Pi(\lambda)}\widetilde{G}_2(\Omega(\lambda,t),t)d\lambda$$

= (6.15) 的右端项，不过，其中的 1 替换为 2，且)(σ1 λ 替换为)(σ2 λ 。

最后，将积分 (6.14)、(6.15)、(6.16) 和 (6.17) 代入 (6.7)，即可得到问题 (6.1) 在 $4\alpha > \beta^2$ 情形下的解的积分表示。

情形 $4\alpha < \beta^2$ 其中 $\beta > 0$。在此情形下，多项式 $\Pi\ \lambda\ = 1 + \beta\lambda^2 + \alpha\lambda^4$)(的零点为数值 λ_1、λ_2、$-\lambda_1$、$-\lambda_2$，其中

$$\lambda_1 = i\sqrt{\frac{\beta + \sqrt{\beta^2 - 4\alpha}}{2\alpha}} \text{ and } \lambda_2 = i\sqrt{\frac{\beta - \sqrt{\beta^2 - 4\alpha}}{2\alpha}},$$

问题 (6.1) 的解的构造与前一种情形类似。

情形 $4\alpha = \beta^2$看来，在此情形下，我们没有足够的数据来处理问题 (6.1)，因为多项式$\Pi\ \lambda\ = 1 + \beta\lambda^2 + \alpha\lambda^4$) (有两个二重零点。例如，如果将数据)(),$_{xx}$ 0 = 2 (*tgtu* 加入问题的数据中，那么看来我们就可以进行解的构造。

7. The operator $\partial_t + \alpha\partial_{xxxxt} - \beta\partial_{xxt} - \gamma(t)\partial_x$

问题 ***6*** 求解

$$\begin{cases} \partial_t u = -\alpha\partial_{xxxxt} u + \beta\partial_{xxt} u - \gamma(t)\partial_x u + f(x,t),\ (x,t) \in \mathbb{R}^+ \times \mathbb{R}^+, \\ u(x,0) = u_0(x),\ x \in \mathbb{R}^+, \\ u(0,t) = g_0(t),\ t \in \mathbb{R}^+, \\ u_x(0,t) = g_1(t),\ t \in \mathbb{R}^+, \end{cases} \tag{7.1}$$

对于),(*txu* 。

解的推导 对于 $\lambda \in \mathbb{C}$ 且 0Im $\lambda \le$ ， (7.1) 中的微分方程得出

$$(1 + \beta\lambda^2 + \alpha\lambda^4)\frac{\partial}{\partial t}[\hat{u}(\lambda,t)] + i\lambda\gamma(t)\hat{u}(\lambda,t) = \alpha[g'_3(t) + i\lambda g'_2(t) - \lambda^2 g'_1(t) - i\lambda^3 g'_0(t)]$$
$$-\beta[g'_1(t) + i\lambda g'_0(t)] + i\lambda\gamma(t)g_0(t) + \hat{f}(\lambda,t)$$

$\Rightarrow$

$$\frac{\partial}{\partial t}[\hat{u}(\lambda,t)] + \frac{\gamma(t)i\lambda}{1 + \beta\lambda^2 + \alpha\lambda^4}\hat{u}(\lambda,t) = \frac{\alpha}{1 + \beta\lambda^2 + \alpha\lambda^4}[g'_3(t) + i\lambda g'_2(t) - \lambda^2 g'_1(t) - i\lambda^3 g'_0(t)]$$
$$-\frac{\beta}{1 + \beta\lambda^2 + \alpha\lambda^4}[g'_1(t) + i\lambda g'_0(t)] + \frac{\gamma(t)i\lambda}{1 + \beta\lambda^2 + \alpha\lambda^4}g_0(t) + \frac{\hat{f}(\lambda,t)}{1 + \beta\lambda^2 + \alpha\lambda^4}$$

$\Rightarrow$

$$\frac{\partial}{\partial t}[\hat{u}(\lambda,t)] + \frac{\gamma(t)i\lambda}{1 + \beta\lambda^2 + \alpha\lambda^4}\hat{u}(\lambda,t) \tag{7.2}$$
$$= \frac{\alpha}{1 + \beta\lambda^2 + \alpha\lambda^4}g'_3(t) + \frac{\alpha i\lambda}{1 + \beta\lambda^2 + \alpha\lambda^4}g'_2(t) + \frac{G(\lambda,t)}{1 + \beta\lambda^2 + \alpha\lambda^4} + \frac{\hat{f}(\lambda,t)}{1 + \beta\lambda^2 + \alpha\lambda^4},$$

where we have set

$$G(\lambda,t) := -\alpha[\lambda^2 g'_1(t) + i\lambda^3 g'_0(t)] - \beta[g'_1(t) + i\lambda g'_0(t)] + \gamma(t)i\lambda g_0(t)$$
$$= -(\alpha\lambda^2 + \beta)g'_1(t) - i\lambda(\alpha\lambda^2 + \beta)g'_0(t) + \gamma(t)i\lambda g_0(t).$$

此外，令

$$\omega(\lambda,t)=\frac{\gamma(t)i\lambda}{1+\beta\lambda^2+\alpha\lambda^4},\ \ \Omega(\lambda,t)=\int_{\tau=0}^{t}\omega(\lambda,\tau)d\tau=\int_{\tau=0}^{t}\frac{\gamma(\tau)i\lambda}{1+\beta\lambda^2+\alpha\lambda^4}d\tau=\frac{i\lambda}{1+\beta\lambda^2+\alpha\lambda^4}\int_{\tau=0}^{t}\gamma(\tau)d\tau\ ,$$

我们将（7.2）写成如下形式:

$$\frac{\partial}{\partial t}[e^{\Omega(\lambda,t)}\hat{u}(\lambda,t)]=\frac{\alpha e^{\Omega(\lambda,t)}g'_3(t)}{1+\beta\lambda^2+\alpha\lambda^4}+\frac{\alpha i\lambda e^{\Omega(\lambda,t)}g'_2(t)}{1+\beta\lambda^2+\alpha\lambda^4}-\frac{e^{\Omega(\lambda,t)}G(\lambda,t)}{1+\beta\lambda^2+\alpha\lambda^4}+\frac{e^{\Omega(\lambda,t)}\hat{f}(\lambda,t)}{1+\beta\lambda^2+\alpha\lambda^4}.$$

对上述方程积分，我们得到

$$(7.3)\quad e^{\Omega(\lambda,t)}\hat{u}(\lambda,t)=\hat{u}_0(\lambda)+\alpha\int_{\tau=0}^{t}\frac{e^{\Omega(\lambda,\tau)}g'_3(\tau)}{1+\beta\lambda^2+\alpha\lambda^4}d\tau+\alpha\int_{\tau=0}^{t}\frac{i\lambda e^{\Omega(\lambda,\tau)}g'_2(\tau)}{1+\beta\lambda^2+\alpha\lambda^4}d\tau$$
$$+\int_{\tau=0}^{t}\frac{e^{\Omega(\lambda,\tau)}G(\lambda,\tau)}{1+\beta\lambda^2+\alpha\lambda^4}d\tau+\int_{\tau=0}^{t}\frac{e^{\Omega(\lambda,\tau)}\hat{f}(\lambda,\tau)}{1+\beta\lambda^2+\alpha\lambda^4}d\tau\ .$$

定义 ng

$$(g'_3\ \widetilde{})(\Omega(\lambda,t),t)=\int_{\tau=0}^{t}e^{\Omega(\lambda,\tau)}g'_3(\tau)d\tau\ ,\ (g'_2\ \widetilde{})(\Omega(\lambda,t),t)=\int_{\tau=0}^{t}e^{\Omega(\lambda,\tau)}g'_2(\tau)d\tau\ ,$$

$$\widetilde{G}(\Omega(\lambda,t),\lambda,t)=\int_{\tau=0}^{t}e^{\Omega(\lambda,\tau)}G(\lambda,\tau)d\tau\ \text{ and }\ \widetilde{\hat{f}}(\Omega(\lambda,t),\lambda,t)=\int_{\tau=0}^{t}e^{\Omega(\lambda,\tau)}\hat{f}(\lambda,\tau)d\tau\ ,$$

我们将（7.3）写成如下形式:

$$(7.4)\quad \hat{u}(\lambda,t)=e^{-\Omega(\lambda,t)}\hat{u}_0(\lambda)+\alpha\frac{e^{-\Omega(\lambda,t)}}{1+\beta\lambda^2+\alpha\lambda^4}(g'_3\ \widetilde{})(\Omega(\lambda,t),t)+\alpha\frac{i\lambda e^{-\Omega(\lambda,t)}}{1+\beta\lambda^2+\alpha\lambda^4}(g'_2\ \widetilde{})(\Omega(\lambda,t),t)$$
$$+\frac{e^{-\Omega(\lambda,t)}}{1+\beta\lambda^2+\alpha\lambda^4}\widetilde{G}(\Omega(\lambda,t),\lambda,t)+\frac{e^{-\Omega(\lambda,t)}}{1+\beta\lambda^2+\alpha\lambda^4}\widetilde{\hat{f}}(\Omega(\lambda,t),\lambda,t)\text{, for }\lambda\in\mathbb{C}\text{ with }\mathrm{Im}\lambda\le 0.$$

Now (7.4) gives

$$(7.5)\quad 2\pi u(x,t)=\int_{-\infty}^{\infty}e^{i\lambda x}\hat{u}(\lambda,t)d\lambda$$
$$=\int_{-\infty}^{\infty}e^{i\lambda x-\Omega(\lambda,t)}\hat{u}_0(\lambda)d\lambda+\alpha\int_{-\infty}^{\infty}\frac{e^{i\lambda x-\Omega(\lambda,t)}}{1+\beta\lambda^2+\alpha\lambda^4}(g'_3\ \widetilde{})(\Omega(\lambda,t),t)d\lambda+\alpha\int_{-\infty}^{\infty}\frac{i\lambda e^{i\lambda x-\Omega(\lambda,t)}}{1+\beta\lambda^2+\alpha\lambda^4}(g'_2\ \widetilde{})(\Omega(\lambda,t),t)d\lambda$$
$$+\int_{-\infty}^{\infty}\frac{e^{i\lambda x-\Omega(\lambda,t)}}{1+\beta\lambda^2+\alpha\lambda^4}\widetilde{G}(\Omega(\lambda,t),\lambda,t)d\lambda+\int_{-\infty}^{\infty}\frac{e^{i\lambda x-\Omega(\lambda,t)}}{1+\beta\lambda^2+\alpha\lambda^4}\widetilde{\hat{f}}(\Omega(\lambda,t),\lambda,t)d\lambda\ .$$

我们继续进行构造，假设为 $4\alpha>\beta^2$。

这种情况 $4\alpha>\beta^2$ 我们考虑多项式 $\Pi\ \lambda\ =1+\beta\lambda^2+\alpha\lambda^4$:)(及其零点 λ_1，λ_2，$-\lambda_1$，$-\lambda_2$，如第6节所示。考虑第6节中定义的积分路径 1 和C2，我们将 (7.5) 写成如下形式:

$$(7.6)\ 2\pi u(x,t)=\int_{-\infty}^{\infty}e^{i\lambda x-\Omega(\lambda,t)}\hat{u}_0(\lambda)d\lambda+\alpha\int_{\mathcal{C}_1}\frac{e^{i\lambda x-\Omega(\lambda,t)}}{\Pi(\lambda)}(g'_3\ \widetilde{})(\Omega(\lambda,t),t)d\lambda+\alpha\int_{\mathcal{C}_2}\frac{e^{i\lambda x-\Omega(\lambda,t)}}{\Pi(\lambda)}(g'_3\ \widetilde{})(\Omega(\lambda,t),t)d\lambda$$
$$+\alpha\int_{\mathcal{C}_1}\frac{i\lambda e^{i\lambda x-\Omega(\lambda,t)}}{\Pi(\lambda)}(g'_2\ \widetilde{})(\Omega(\lambda,t),t)d\lambda+\alpha\int_{\mathcal{C}_2}\frac{i\lambda e^{i\lambda x-\Omega(\lambda,t)}}{\Pi(\lambda)}(g'_2\ \widetilde{})(\Omega(\lambda,t),t)d\lambda$$

$$+\int_{\mathcal{C}_1}\frac{e^{i\lambda x-\Omega(\lambda,t)}}{\Pi(\lambda)}\widetilde{G}(\Omega(\lambda,t),\lambda,t)d\lambda+\int_{\mathcal{C}_2}\frac{e^{i\lambda x-\Omega(\lambda,t)}}{\Pi(\lambda)}\widetilde{G}(\Omega(\lambda,t),\lambda,t)d\lambda+\int_{-\infty}^{\infty}\frac{e^{i\lambda x-\Omega(\lambda,t)}}{\Pi(\lambda)}\widetilde{f}(\Omega(\lambda,t),\lambda,t)d\lambda\,.$$

接下来我们考虑方程),()),((t $t\omega\ \sigma\ \lambda\ =\omega\ \lambda$ ，即，

$$\frac{\sigma(\lambda)}{1+\beta[\sigma(\lambda)]^2+\alpha[\sigma(\lambda)]^4}=\frac{\lambda}{1+\beta\lambda^2+\alpha\lambda^4}\ \Rightarrow\ \lambda\{1+\beta[\sigma(\lambda)]^2+\alpha[\sigma(\lambda)]^4\}=(1+\beta\lambda^2+\alpha\lambda^4)\sigma(\lambda)\,.$$

这导出了函数)(σ λ 满足的代数方程 $\alpha\lambda[\sigma\ \lambda\ ]^4+\beta\lambda[\sigma\ \lambda\ ]^2-\ 1+\beta\lambda^2+\alpha\lambda^4\ \sigma\ \lambda\ +\lambda=0$,)() ()( )(。我们考虑多项式

$$\begin{aligned}Q(\lambda,\sigma)&:=\alpha\lambda\sigma^4+\beta\lambda\sigma^2-(1+\beta\lambda^2+\alpha\lambda^4)\sigma+\lambda\\&=(\sigma-\lambda)[\alpha\lambda\sigma^3+\alpha\lambda^2\sigma^2+(\beta\lambda+\alpha\lambda^3)\sigma-1],\end{aligned}$$

关于两个复变量 λ 和 σ，即 $\lambda\ \sigma\ \in\mathbb{C}[\lambda,\sigma]$),(Q。

固定一个 }2,1{$\in j$ ，注意到多项式 $\lambda\ \ \sigma\ =\ \ \lambda\ \sigma\ _{\lambda=\lambda_j}\in\mathbb{C}[\sigma]$),(),($QQ\ \ _j$ 关于 σ 的零点为 λ_1、 λ_2、 $-\lambda_1$、 $-\lambda_2$。特别地，这些零点均为单零点，因此，

(7.7) $$Q_\sigma(\lambda_j,\sigma)=\left.\frac{\partial Q(\lambda,\sigma)}{\partial\sigma}\right|_{\lambda=\lambda_j}\neq 0\text{, for }\sigma\in\{\lambda_1,\lambda_2,-\lambda_1,-\lambda_2\}\,.$$

将 $=1j$ 和 $\sigma=-\lambda_1$ 代入 (7.7)，得到

$$\left.\frac{\partial Q(\lambda,\sigma)}{\partial\sigma}\right|_{(\lambda,\sigma)=(\lambda_1,-\lambda_1)}\neq 0\,.$$

此外，0),( ),(),($\lambda\ \sigma\ \ _{\lambda\ \sigma\ =\lambda_1\ -\lambda_1}=Q$，因此，根据隐函数定理，存在一个函数)($\sigma_{11}$ λ ，在 λ 所在的 λ_1 的开邻域内解析，使得

(7.8) $$\sigma_{1,1}(\lambda_1)=-\lambda_1\ \text{ and }\ Q(\lambda,\sigma_{1,1}(\lambda))=0\text{, for }\lambda\text{ close to }\lambda_1\,.$$

此外，

$$Q_\lambda(\lambda,\sigma_{1,1}(\lambda))+Q_\sigma(\lambda,\sigma_{1,1}(\lambda))\frac{d\sigma_{1,1}(\lambda)}{d\lambda}=0\ \Rightarrow\ \left.\frac{d\sigma_{1,1}(\lambda)}{d\lambda}\right|_{\lambda=\lambda_1}=-\left.\frac{Q_\lambda(\lambda,\sigma_{1,1}(\lambda))}{Q_\sigma(\lambda,\sigma_{1,1}(\lambda))}\right|_{\lambda=\lambda_1}=-\frac{Q_\lambda(\lambda_1,-\lambda_1)}{Q_\sigma(\lambda_1,-\lambda_1)}\neq 0\,,$$

因此，函数)(σ_{11} λ 是从 λ_1 的一个开邻域到 $-\lambda_1$ 的一个开邻域的双全纯映射。此外，)(σ_{11} λ 满足

(7.9) $$\omega(\sigma_{1,1}(\lambda),t)=\omega(\lambda,t)\ \text{ and }\ \Omega(\sigma_{1,1}(\lambda),t)=\Omega(\lambda,t)\text{, for }\lambda\text{ close to }\lambda_1\,.$$

类似地，0),( ),0,($\lambda\ \sigma\ \ _{\lambda\ \sigma\ =\lambda_1\ -\lambda_2}=Q$ ，并且由 (7.7) 可知，

$$\left.\frac{\partial Q(\lambda,\sigma)}{\partial\sigma}\right|_{(\lambda,\sigma)=(\lambda_1,-\lambda_2)}\neq 0\,.$$

因此 此外，存在一个函数)(σ_{12} λ ,, 它在 λ_1 的一个开邻域内关于 λ 解析，使得 t

$$\sigma_{1,2}(\lambda_1)=-\lambda_2\ \text{ and }\ Q(\lambda,\sigma_{1,2}(\lambda))=0\text{, for }\lambda\text{ close to }\lambda_1\,.$$

此外，函数)(σ_{12} λ 是从 λ_1 的一个开邻域到 $-\lambda_2$ 的一个开邻域的双全纯映射，并满足

(7.10) $\omega(\sigma_{1,2}(\lambda),t)=\omega(\lambda,t)$ and $\Omega(\sigma_{1,2}(\lambda),t)=\Omega(\lambda,t)$, for λ close to λ_1.

当 λ 接近 λ_2 时，我们还可以构造解析函数)(σ 2 1 λ 和)(σ 2 2 λ，它们都定义在 λ_2 的一个开邻域上，使得

$$\sigma_{2,1}(\lambda_2)=-\lambda_1,\ \sigma_{2,2}(\lambda_2)=-\lambda_2,\ \left.\frac{d\sigma_{2,1}(\lambda)}{d\lambda}\right|_{\lambda=\lambda_2}\neq 0,\ \left.\frac{d\sigma_{2,2}(\lambda)}{d\lambda}\right|_{\lambda=\lambda_2}\neq 0,$$

并且，当 λ 接近 2 时 ，

(7.11) $\omega(\sigma_{2,1}(\lambda),t)=\omega(\lambda,t)$, $\Omega(\sigma_{2,1}(\lambda),t)=\Omega(\lambda,t)$,$\omega(\sigma_{2,2}(\lambda),t)=\omega(\lambda,t)$, $\Omega(\sigma_{2,2}(\lambda),t)=\Omega(\lambda,t)$.

注意 函数)(σ 1 1 λ ，和)(σ 1 2 λ , 是三次方程的解

(7.12) $$\alpha\lambda[\sigma(\lambda)]^3+\alpha\lambda^2[\sigma(\lambda)]^2+(\beta\lambda+\alpha\lambda^3)\sigma(\lambda)-1=0,$$

在 λ 接近 λ_1 时定义，并具有指定的性质；而函数)(σ 2 1 λ ，和)(σ 2 2 λ , 则是方程 (7.12) 的解，在 λ 接近 λ_2 时定义。特别是，这些函数可以通过卡尔达诺公式，利用三次根式和平方根，以参数 α 和 β 显式表示。在上一段中，我们的工作旨在说明，在卡尔达诺公式中适当地选择三次根式和平方根，可以得到具有相应性质的方程 (7.12) 的解，从而使我们能够继续构造问题 (7.1) 的解。

鉴于 函数)(σ 1 1 λ , ,)(σ 1 2 λ , ,)(σ 2 1 λ , ,)(σ 2 2 λ , , 的性质表明，(7.4) 意味着：

(7.13) $$\hat{u}(\sigma_{1,j}(\lambda),t)=e^{-\Omega(\lambda,t)}\hat{u}_0(\sigma_{1,j}(\lambda))+\alpha\frac{e^{-\Omega(\lambda,t)}}{\Pi(\sigma_{1,j}(\lambda))}(g'_3\ \widetilde{})(\Omega(\lambda,t),t)+\alpha\frac{i\sigma_{1,j}(\lambda)e^{-\Omega(\lambda,t)}}{\Pi(\sigma_{1,j}(\lambda))}(g'_2\ \widetilde{})(\Omega(\lambda,t),t)$$

$$+\frac{e^{-\Omega(\lambda,t)}}{\Pi(\sigma_{1,j}(\lambda))}\widetilde{G}(\Omega(\lambda,t),\sigma_{1,j}(\lambda),t)+\frac{e^{-\Omega(\lambda,t)}}{\Pi(\sigma_{1,j}(\lambda))}\widetilde{\hat{f}}(\Omega(\lambda,t),\sigma_{1,j}(\lambda),t),\ \text{for } \lambda\in\mathcal{C}_1 \text{ and } j\in\{1,2\}.$$

and

(7.14) $$\hat{u}(\sigma_{2,j}(\lambda),t)=e^{-\Omega(\lambda,t)}\hat{u}_0(\sigma_{2,j}(\lambda))+\alpha\frac{e^{-\Omega(\lambda,t)}}{\Pi(\sigma_{2,j}(\lambda))}(g'_3\ \widetilde{})(\Omega(\lambda,t),t)+\alpha\frac{i\sigma_{2,j}(\lambda)e^{-\Omega(\lambda,t)}}{\Pi(\sigma_{2,j}(\lambda))}(g'_2\ \widetilde{})(\Omega(\lambda,t),t)$$

$$+\frac{e^{-\Omega(\lambda,t)}}{\Pi(\sigma_{2,j}(\lambda))}\widetilde{G}(\Omega(\lambda,t),\sigma_{2,j}(\lambda),t)+\frac{e^{-\Omega(\lambda,t)}}{\Pi(\sigma_{2,j}(\lambda))}\widetilde{\hat{f}}(\Omega(\lambda,t),\sigma_{2,j}(\lambda),t),\ \text{for } \lambda\in\mathcal{C}_2 \text{ and } j\in\{1,2\}.$$

我们将 (7.13) 视为关于未知量的代数方程组

(7.15) $e^{-\Omega(\lambda,t)}(g'_3\ \widetilde{})(\Omega(\lambda,t),t)$ and $e^{-\Omega(\lambda,t)}(g'_2\ \widetilde{})(\Omega(\lambda,t),t)$, for $\lambda\in\mathcal{C}_1$.

该方程组中未知量 (7.15) 的行列式为

$$\det\begin{bmatrix}\dfrac{\alpha}{\Pi(\sigma_{1,1}(\lambda))} & \dfrac{\alpha i\sigma_{1,1}(\lambda)}{\Pi(\sigma_{1,1}(\lambda))}\\ \dfrac{\alpha}{\Pi(\sigma_{1,2}(\lambda))} & \dfrac{\alpha i\sigma_{1,2}(\lambda)}{\Pi(\sigma_{1,2}(\lambda))}\end{bmatrix}=\frac{\alpha^2 i[\sigma_{1,2}(\lambda)-\sigma_{1,1}(\lambda)]}{\Pi(\sigma_{1,1}(\lambda))\Pi(\sigma_{1,2}(\lambda))}\neq 0,\ \text{for } \lambda \text{ close to } \lambda_1.$$

对于方程组 (7.14) 和未知量 (7.15)，也存在类似的关系，不过这一次 λ 接近 λ_2。

另一个需要检查的关键点是：当我们将 1,1 *tu* σ λ 、ˆ 2,1 *tu* σ λ 、ˆ 1,2 *tu* σ λ 、ˆ 1,2 *tu* σ λ 这些量代入

（7.6）时，其中将出现的所有积分都必须为零；这些量将通过求解方程组（7.14）和（7.15）来计算。（7.15）中的值（对于 $\lambda\in\mathcal{C}_1$ 和 $\lambda\in\mathcal{C}_2$）代入（7.6）后，即可验证这一点。例如，我们有：

$$\int_{\mathcal{C}_1} e^{i\lambda x}\hat{u}(\sigma_{1,1}(\lambda),t)\frac{\alpha i\sigma_{1,2}(\lambda)}{\Pi(\sigma_{1,2}(\lambda))}\left\{\frac{\alpha^2 i[\sigma_{1,2}(\lambda)-\sigma_{1,1}(\lambda)]}{\Pi(\sigma_{1,1}(\lambda))\Pi(\sigma_{1,2}(\lambda))}\right\}^{-1}\frac{1}{\Pi(\lambda)}d\lambda=0, \tag{7.16}$$

这由被积函数的解析性得出；当 λ 接近 λ_1 时，该解析性又由方程得出

$$\frac{\Pi(\sigma_{1,1}(\lambda))}{\Pi(\lambda)}=\frac{\sigma_{1,1}(\lambda)}{\lambda}.$$

因此，求解方程组 (7.14) 和 (7.15)，并将 (7.15) 中的值（分别对应 $\lambda\in\mathcal{C}_1$ 和 $\lambda\in\mathcal{C}_2$）代入 (7.6)，即可得到问题 (7.1) 在 $4\alpha>\beta^2$ 情况下的解公式。

注 我们在第6节末尾针对问题5所作的评论，关于 $4\alpha<\beta^2$ 和 $4\alpha=\beta^2$ 的情形，同样适用于问题6的情形。

8. The operator $\partial_t-\alpha\partial_{xxxxxxt}+\beta\partial_{xxxxt}-\gamma\partial_{xxt}-\delta(t)\partial_{xx}$

问题*7* 求解

$$\begin{cases}\partial_t u=\alpha\partial_{xxxxxxt}u-\beta\partial_{xxxxt}u+\gamma\partial_{xxt}u+\delta(t)\partial_{xx}u+f(x,t),\ (x,t)\in\mathbb{R}^+\times\mathbb{R}^+,\\ u(x,0)=u_0(x),\ x\in\mathbb{R}^+,\\ u(0,t)=g_0(t),\ t\in\mathbb{R}^+,\\ u_x(0,t)=g_1(t),\ t\in\mathbb{R}^+,\\ u_{xx}(0,t)=g_2(t),\ t\in\mathbb{R}^+,\end{cases} \tag{8.1}$$

对于),(*txu*。

解的推导 对于 $\lambda\in\mathbb{C}$ 且 $\mathrm{Im}\,\lambda\le 0$，式 (8.1) 中的微分方程导出

$$\begin{aligned}&(1+\gamma\lambda^2+\beta\lambda^4+\alpha\lambda^6)\frac{\partial}{\partial t}[\hat{u}(\lambda,t)]+\delta(t)\lambda^2\hat{u}(\lambda,t)\\ &\quad=-\alpha[g'_5(t)+i\lambda g'_4(t)+(i\lambda)^2g'_3(t)+(i\lambda)^3g'_2(t)+(i\lambda)^4g'_1(t)+(i\lambda)^5g'_0(t)]\\ &\qquad+\beta[g'_3(t)+i\lambda g'_2(t)+(i\lambda)^2g'_1(t)+(i\lambda)^3g'_0(t)]\\ &\qquad-\gamma[g'_1(t)+i\lambda g'_0(t)]-\delta(t)[g_1(t)+i\lambda g_0(t)]+\hat{f}(\lambda,t)\end{aligned}$$

$\Rightarrow$

$$\begin{aligned}&\frac{\partial}{\partial t}[\hat{u}(\lambda,t)]+\frac{\delta(t)\lambda^2}{\Pi(\lambda)}\hat{u}(\lambda,t)\\ &\quad=-\frac{\alpha}{\Pi(\lambda)}[g'_5(t)+i\lambda g'_4(t)+(i\lambda)^2g'_3(t)+(i\lambda)^3g'_2(t)+(i\lambda)^4g'_1(t)+(i\lambda)^5g'_0(t)]\\ &\qquad+\frac{\beta}{\Pi(\lambda)}[g'_3(t)+i\lambda g'_2(t)+(i\lambda)^2g'_1(t)+(i\lambda)^3g'_0(t)]\\ &\qquad-\frac{\gamma}{\Pi(\lambda)}[g'_1(t)+i\lambda g'_0(t)]-\frac{\delta(t)}{\Pi(\lambda)}[g_1(t)+i\lambda g_0(t)]+\frac{\hat{f}(\lambda,t)}{\Pi(\lambda)},\end{aligned} \tag{8.2}$$

其中我们令 $\Pi(\lambda)=1+\gamma\lambda^2+\beta\lambda^4+\alpha\lambda^6$。

接下来，令

$$\begin{aligned}G(\lambda,t)=&-\alpha[(i\lambda)^3 g'_2(t)+(i\lambda)^4 g'_1(t)+(i\lambda)^5 g'_0(t)]\\&+i\lambda g'_2(t)+(i\lambda)^2 g'_1(t)+(i\lambda)^3 g'_0(t)]-\gamma[g'_1(t)+i\lambda g'_0(t)]-\delta(t)[g_1(t)+i\lambda g_0(t)]\\&=i\lambda(\alpha\lambda^2+\beta)g'_2(t)-(\alpha\lambda^4+\beta\lambda^2+\gamma)g'_1(t)-i\lambda(\alpha\lambda^4+\beta\lambda^2+\gamma)g'_0(t)-\delta(t)[g_1(t)+i\lambda g_0(t)],\end{aligned}$$

我们将（8.2）写成如下形式:

$$\frac{\partial}{\partial t}[\hat{u}(\lambda,t)]+\frac{\delta(t)\lambda^2}{\Pi(\lambda)}\hat{u}(\lambda,t)=-\frac{\alpha g'_5(t)}{\Pi(\lambda)}-\frac{\alpha i\lambda g'_4(t)}{\Pi(\lambda)}+\frac{(\alpha\lambda^2+\beta)g'_3(t)}{\Pi(\lambda)}+\frac{G(\lambda,t)}{\Pi(\lambda)}+\frac{\hat{f}(\lambda,t)}{\Pi(\lambda)}. \tag{8.3}$$

此外，令

$$\omega(\lambda,t)=\frac{\delta(t)\lambda^2}{1+\gamma\lambda^2+\beta\lambda^4+\alpha\lambda^6}=\frac{\delta(t)\lambda^2}{\Pi(\lambda)} \quad \text{and} \quad \Omega(\lambda,t)=\int_{\tau=0}^{t}\omega(\lambda,\tau)d\tau=\frac{\lambda^2}{\Pi(\lambda)}\int_{\tau=0}^{t}\delta(\tau)d\tau\ ,$$

我们将（8.3）写成以下形式:

$$\frac{\partial}{\partial t}[e^{\Omega(\lambda,t)}\hat{u}(\lambda,t)]=-\frac{\alpha e^{\Omega(\lambda,t)}g'_5(t)}{\Pi(\lambda)}-\frac{\alpha i\lambda e^{\Omega(\lambda,t)}g'_4(t)}{\Pi(\lambda)}+\frac{(\alpha\lambda^2+\beta)e^{\Omega(\lambda,t)}g'_3(t)}{\Pi(\lambda)}+\frac{e^{\Omega(\lambda,t)}G(\lambda,t)}{\Pi(\lambda)}+\frac{e^{\Omega(\lambda,t)}\hat{f}(\lambda,t)}{\Pi(\lambda)}.$$

积分后得到

$$\begin{aligned}\hat{u}(\lambda,t)=\hat{u}_0(\lambda)&-\frac{\alpha e^{-\Omega(\lambda,t)}(g'_5\,\widetilde{})(\Omega(\lambda,t),t)}{\Pi(\lambda)}-\frac{\alpha i\lambda e^{-\Omega(\lambda,t)}(g'_4\,\widetilde{})(\Omega(\lambda,t),t)}{\Pi(\lambda)}\\&+\frac{(\alpha\lambda^2+\beta)e^{-\Omega(\lambda,t)}(g'_3\,\widetilde{})(\Omega(\lambda,t),t)}{\Pi(\lambda)}+\frac{e^{-\Omega(\lambda,t)}\widetilde{G}(\Omega(\lambda,t),\lambda,t)}{\Pi(\lambda)}+\frac{e^{-\Omega(\lambda,t)}\hat{f}(\Omega(\lambda,t),\lambda,t)}{\Pi(\lambda)},\end{aligned} \tag{8.4}$$

where

$$(g'_j\,\widetilde{})(\Omega(\lambda,t),t):=\int_{\tau=0}^{t}e^{\Omega(\lambda,\tau)}g'_j(\tau)d\tau\ ,\ j\in\{5,4,3\}\ ,$$

$$\widetilde{G}(\Omega(\lambda,t),\lambda,t):=\int_{\tau=0}^{t}e^{\Omega(\lambda,\tau)}G(\lambda,\tau)d\tau \ \text{ and } \ \widetilde{\hat{f}}(\Omega(\lambda,t),\lambda,t):=\int_{\tau=0}^{t}e^{\Omega(\lambda,\tau)}\hat{f}(\lambda,\tau)d\tau\ .$$

关于参数的假设 $\alpha\ \beta\ \gamma$，我们假设多项式 $\Pi(\mu)=1+\gamma\mu+\beta\mu^2+\alpha\mu^3$ 有互异的零点，即多项式 $\Pi(\mu)$ 和 $\Pi'(\mu)=\gamma+2\beta\mu+3\alpha\mu^2$ 的结式 $\mathcal{R}(\Pi,\Pi')$ 不为零。更准确地说

$$\mathcal{R}(\varpi,\varpi')=\det\begin{bmatrix}\alpha&0&3\alpha&0&0\\ \beta&\alpha&2\beta&3\alpha&0\\ \gamma&\beta&\gamma&2\beta&3\alpha\\ 1&\gamma&0&\gamma&2\beta\\ 0&1&0&0&\gamma\end{bmatrix}\neq 0\,. \tag{8.5}$$

由 (8.5) 可知，多项式 $\Pi(\lambda)=1+\gamma\lambda^2+\beta\lambda^4+\alpha\lambda^6$ 的零点互不相同；事实上，其中三个零点位于上半平面 $\{\lambda:\mathrm{Im}\,\lambda>0\}$，另外三个位于下半平面 $\{\lambda:\mathrm{Im}\,\lambda<0\}$。设 $\lambda_1,\lambda_2,\lambda_3$ 是 $\Pi(\lambda)$ 的零点，且 $\mathrm{Im}\,\lambda_1>0$、$\mathrm{Im}\,\lambda_2>0$、$\mathrm{Im}\,\lambda_3>0$，那么 $\Pi(\lambda)$ 在半平面 $\{\lambda:\mathrm{Im}\,\lambda<0\}$ 中的零点就是 $-\lambda_1,-\lambda_2,-\lambda_3$。

接下来，我们考虑围绕点 321 ,λ χ λ 的积分路径)0,0,(λ1 C λ2 C λ3，将其取为足够小的简单闭曲线，并沿逆时针方向定向。于是，(8.4) 给出以下方程

$$(8.6)\quad 2\pi u(x,t)=\int_{-\infty}^{\infty}e^{i\lambda x}\hat{u}(\lambda,t)d\lambda=\int_{-\infty}^{\infty}e^{i\lambda x}\hat{u}_0(\lambda)d\lambda-\int_{\mathcal{C}(\lambda_1)+\mathcal{C}(\lambda_2)+\mathcal{C}(\lambda_3)}\frac{\alpha e^{i\lambda x-\Omega(\lambda,t)}(g'_5)^{\sim}(\Omega(\lambda,t),t)}{\Pi(\lambda)}d\lambda$$

$$-\int_{\mathcal{C}(\lambda_1)+\mathcal{C}(\lambda_2)+\mathcal{C}(\lambda_3)}\frac{\alpha i\lambda e^{i\lambda x-\Omega(\lambda,t)}(g'_4)^{\sim}(\Omega(\lambda,t),t)}{\Pi(\lambda)}d\lambda+\int_{\mathcal{C}(\lambda_1)+\mathcal{C}(\lambda_2)+\mathcal{C}(\lambda_3)}\frac{(\alpha\lambda^2+\beta)e^{i\lambda x-\Omega(\lambda,t)}(g'_3)^{\sim}(\Omega(\lambda,t),t)}{\Pi(\lambda)}d\lambda$$

$$+\int_{\mathcal{C}(\lambda_1)+\mathcal{C}(\lambda_2)+\mathcal{C}(\lambda_3)}\frac{e^{i\lambda x-\Omega(\lambda,t)}\widetilde{G}(\Omega(\lambda,t),\lambda,t)}{\Pi(\lambda)}d\lambda+\int_{-\infty}^{\infty}\frac{e^{i\lambda x-\Omega(\lambda,t)}\hat{f}(\Omega(\lambda,t),\lambda,t)}{\Pi(\lambda)}d\lambda,$$

接下来，我们求解代数方程

$$(8.7)\qquad \frac{[\sigma(\lambda)]^2}{1+\gamma[\sigma(\lambda)]^2+\beta[\sigma(\lambda)]^4+\alpha[\sigma(\lambda)]^6}=\frac{\lambda^2}{1+\gamma\lambda^2+\beta\lambda^4+\alpha\lambda^6},$$

对于)(σ λ 。我们可以将 (8.7) 写成如下形式

$$(8.8)\qquad (\alpha\lambda^2)[\sigma(\lambda)]^6+(\beta\lambda^2)[\sigma(\lambda)]^4-(1+\beta\lambda^4+\alpha\lambda^6)[\sigma(\lambda)]^2+\lambda^2,$$

这意味着，满足 (8.7) 的函数)(σ λ 是函数)(ς λ 的平方根，而函数)(ς λ 满足三次方程

$$(8.9)\qquad (\alpha\lambda^2)[\varsigma(\lambda)]^3+(\beta\lambda^2)[\varsigma(\lambda)]^2-(1+\beta\lambda^4+\alpha\lambda^6)[\varsigma(\lambda)]^2+\lambda^2=0.$$

接下来，固定一个 }3,2,1{∈j，并考虑)(Π λ 的相应零点 jλ 。我们断言，存在一个双全纯函数)(σ 1=σ 1 λj j ，它将 jλ 的一个开邻域映射到 −λ1 的一个开邻域，使得 σj1 λj =−λ1)(，并且当 λ 接近 jλ 时，该函数满足 (8.7)。事实上，考虑多项式

$$Q(\lambda,\sigma)=\alpha\lambda^2\sigma^6+\beta\lambda^2\sigma^4-(1+\beta\lambda^4+\alpha\lambda^6)\sigma^2+\lambda^2\in\mathbb{C}[\lambda,\sigma],$$

对于变量 λ 和 σ，我们注意到

$$(8.10)\qquad Q(\lambda,\sigma)\big|_{(\lambda,\sigma)=(\lambda_j,-\lambda_1)}=0\ \text{ and }\ \frac{\partial Q(\lambda,\sigma)}{\partial\sigma}\bigg|_{(\lambda,\sigma)=(\lambda_j,-\lambda_1)}\neq 0.$$

(8.10) 的第二部分源于以下事实：多项式),(λj σ Q ，视为关于 σ 的多项式时，以 σ=−λ1 为单零点。因此，根据隐函数定理，存在具有所需性质的)(σ 1=σ 1 λj j。

类似地，存在双全纯函数)(σ 2=σ 2 λ jj和)(σ 3=σ 3 λ jj，它们分别将从 λj 的一个开邻域映射到 −λ2 和 −λ3 的开邻域，使得 σj2 λj =−λ2)(，σj3 λj =−λ3)(，并且当 λ 接近 jλ 时满足 (8.7)。

使用函数)(σ =σ λ jkjk、}3,2,1{、 ∈kj ，根据（8.5），我们得到以下方程：

$$(8.11)\quad \hat{u}(\sigma_{jk}(\lambda),t)=\hat{u}_0(\sigma_{jk}(\lambda))-\frac{\alpha e^{-\Omega(\lambda,t)}(g'_5)^{\sim}(\Omega(\lambda,t),t)}{\Pi(\sigma_{jk}(\lambda))}$$

$$-\frac{\alpha i\sigma_{jk}(\lambda)e^{-\Omega(\lambda,t)}(g'_4)^{\sim}(\Omega(\lambda,t),t)}{\Pi(\sigma_{jk}(\lambda))}+\frac{(\alpha[\sigma_{jk}(\lambda)]^2+\beta)e^{-\Omega(\lambda,t)}(g'_3)^{\sim}(\Omega(\lambda,t),t)}{\Pi(\sigma_{jk}(\lambda))}$$

$$+\frac{e^{-\Omega(\lambda,t)}\widetilde{G}(\Omega(\lambda,t),\sigma_{jk}(\lambda),t)}{\Pi(\sigma_{jk}(\lambda))}+\frac{e^{-\Omega(\lambda,t)}\hat{f}(\Omega(\lambda,t),\sigma_{jk}(\lambda),t)}{\Pi(\sigma_{jk}(\lambda))},\ \text{for } \lambda\in\mathcal{C}(\lambda_j).$$

固定一个 }3,2,1{∈j ，我们考虑未知量中的代数方程组（8.11），其中 3,2,=1k 和)(λ∈C λj ，

(8.12) $e^{-\Omega(\lambda,t)}(g'_5\ \widetilde{})(\Omega(\lambda,t),t)$, $e^{-\Omega(\lambda,t)}(g'_4\ \widetilde{})(\Omega(\lambda,t),t)$, $e^{-\Omega(\lambda,t)}(g'_3\ \widetilde{})(\Omega(\lambda,t),t)$, $\lambda\in\mathcal{C}(\lambda_j)$.

该系统中未知量（8.12）的行列式为

$$\mathcal{D}(\lambda)=\det\begin{bmatrix}\frac{-\alpha}{\Pi(\sigma_{j,1}(\lambda))} & \frac{-\alpha i\sigma_{j,1}(\lambda)}{\Pi(\sigma_{j,1}(\lambda))} & \frac{\alpha[\sigma_{j,1}(\lambda)]^2+\beta}{\Pi(\sigma_{j,1}(\lambda))}\\ \frac{-\alpha}{\Pi(\sigma_{j,2}(\lambda))} & \frac{-\alpha i\sigma_{j,2}(\lambda)}{\Pi(\sigma_{j,2}(\lambda))} & \frac{\alpha[\sigma_{j,2}(\lambda)]^2+\beta}{\Pi(\sigma_{j,2}(\lambda))}\\ \frac{-\alpha}{\Pi(\sigma_{j,3}(\lambda))} & \frac{-\alpha i\sigma_{j,3}(\lambda)}{\Pi(\sigma_{j,3}(\lambda))} & \frac{\alpha[\sigma_{j,3}(\lambda)]^2+\beta}{\Pi(\sigma_{j,3}(\lambda))}\end{bmatrix}.$$

计算表明，)(λ 在点 jλ=λ 处的值等于

(8.13) $$\mathcal{D}(\lambda)\big|_{\lambda=\lambda_j}=\frac{\alpha^3 i\prod_{1\le k<l\le 3}[\sigma_{j,k}(\lambda_j)-\sigma_{j,l}(\lambda_j)]}{\Pi(\sigma_{j,1}(\lambda_j))\Pi(\sigma_{j,2}(\lambda_j))\Pi(\sigma_{j,3}(\lambda_j))}\neq 0,$$

因为，根据 （8.7），)(1 jjσ λ 、)(2 jj σ λ 、)(3 jj σ λ 是多项式的六个不同零点中的三个 1

$$\Pi(\sigma(\lambda))=1+\gamma[\sigma(\lambda)]^2+\beta[\sigma(\lambda)]^4+\alpha[\sigma(\lambda)]^6.$$

由（8.13）可知，对于接近 1λ 的 λ ，0)(λ ≠，因此，可以利用方程组（8.11）计算（8.12）中的各个量，其中 3,2,=1k 。

我们还必须确保另一点，而且这一点至关重要，即沿积分路径)(jλ 的积分为零。这些积分包含项)),((^ tujkσ λ 、}3,2,1{、 ∈kj，这些项是在将（8.12）中的各个量代入（8.6）时产生的。但这一点很容易证明，只需注意到函数

$$\frac{1}{\Pi(\sigma_{j,k}(\lambda))\Pi(\sigma_{j,l}(\lambda))}\frac{1}{\mathcal{D}(\lambda)}\frac{1}{\Pi(\lambda)},\ 1\le k<l\le 3,\ \text{are analytic for } \lambda \text{ close to } \lambda_j,$$

而这反过来又是其解析性的结果

$$\frac{\Pi(\sigma_{j,m}(\lambda))}{\Pi(\lambda)}=\frac{[\sigma_{j,m}(\lambda)]^2}{\lambda^2},\ m\in\{1,2,3\},\ \text{for } \lambda \text{ close to } \lambda_j.$$

因此，将通过求解方程组 (8.11) 得到的量 (8.12) 代入 (8.6)，我们便可用数据表示问题 (8.1) 的解),(txu ，$>0x$ ，$>0t$ 。

9. The operator $\partial_t-\alpha(t)\partial_{xxxxxxt}+\beta(t)\partial_{xxxxxx}-\gamma(t)$

问题 ***8*** 求解

$$
(9.1)\qquad \begin{cases} \partial_t u=\alpha(t)\partial_{xxxxxxt}u+\beta(t)\partial_{xxxxxx}u-\gamma(t)u+f(x,t),\ (x,t)\in\mathbb{R}^+\times\mathbb{R}^+,\\ u(x,0)=u_0(x),\ x\in\mathbb{R}^+,\\ u(0,t)=g_0(t),\ t\in\mathbb{R}^+,\\ u_x(0,t)=g_1(t),\ t\in\mathbb{R}^+,\\ u_{xx}(0,t)=g_2(t),\ t\in\mathbb{R}^+, \end{cases}
$$

对于),(*txu* 。

解的推导 对于 $\lambda\in\mathbb{C}$ 且 $0\mathrm{Im}\ \lambda\le$ ， 式 (9.1) 中的微分方程得出

$$
\begin{aligned}
&[1+\alpha(t)\lambda^6]\frac{\partial}{\partial t}[\hat{u}(\lambda,t)]+[\beta(t)\lambda^6+\gamma(t)]\hat{u}(\lambda,t)\\
&\qquad=-\alpha(t)[g'_5(t)+i\lambda g'_4(t)+(i\lambda)^2g'_3(t)+(i\lambda)^3g'_2(t)+(i\lambda)^4g'_1(t)+(i\lambda)^5g'_0(t)]\\
&\qquad\quad-\beta(t)[g_5(t)+i\lambda g_4(t)+(i\lambda)^2g_3(t)+(i\lambda)^3g_2(t)+(i\lambda)^4g_1(t)+(i\lambda)^5g_0(t)]+\hat{f}(\lambda,t)
\end{aligned}
$$

$\Rightarrow$

$$
\begin{aligned}
&\frac{\partial}{\partial t}[\hat{u}(\lambda,t)]+\frac{\beta(t)\lambda^6+\gamma(t)}{1+\alpha(t)\lambda^6}\hat{u}(\lambda,t)\\
&\qquad=-\frac{\alpha(t)}{1+\alpha(t)\lambda^6}[g'_5(t)+i\lambda g'_4(t)-\lambda^2g'_3(t)-i\lambda^3g'_2(t)+\lambda^4g'_1(t)+i\lambda^5g'_0(t)]\\
&\qquad\quad-\frac{\beta(t)}{1+\alpha(t)\lambda^6}[g_5(t)+i\lambda g_4(t)-\lambda^2g_3(t)-i\lambda^3g_2(t)+\lambda^4g_1(t)+i\lambda^5g_0(t)]+\hat{f}(\lambda,t)
\end{aligned}
$$

$\Rightarrow$

$$
\begin{aligned}
(9.2)\quad &\frac{\partial}{\partial t}[\hat{u}(\lambda,t)]+\frac{\beta(t)\lambda^6+\gamma(t)}{1+\alpha(t)\lambda^6}\hat{u}(\lambda,t)\\
&=-\frac{1}{1+\alpha(t)\lambda^6}[\alpha(t)g'_5(t)+\beta(t)g_5(t)]-\frac{i\lambda}{1+\alpha(t)\lambda^6}[\alpha(t)g'_4(t)+\beta(t)g_4(t)]\\
&\quad+\frac{\lambda^2}{1+\alpha(t)\lambda^6}[\alpha(t)g'_3(t)+\beta(t)g_3(t)]+\frac{G(\lambda,t)}{1+\alpha(t)\lambda^6}+\frac{\hat{f}(\lambda,t)}{1+\alpha(t)\lambda^6},
\end{aligned}
$$

其中我们设

$$
G(\lambda,t)=i\lambda^3[\alpha(t)g'_2(t)+\beta(t)g_2(t)]-\lambda^4[\alpha(t)g'_1(t)+\beta(t)g_1(t)]-i\lambda^5[\alpha(t)g'_0(t)+\beta(t)g_0(t)].
$$

此外，设

$$
G_5(t)=\alpha(t)g'_5(t)+\beta(t)g_5(t),\ G_4(t)=\alpha(t)g'_4(t)+\beta(t)g_4(t)\ \text{and}\ G_3(t)=\alpha(t)g'_3(t)+\beta(t)g_3(t),
$$

我们将（9.2）写作如下:

$$
(9.3)\qquad \frac{\partial}{\partial t}[\hat{u}(\lambda,t)]+\frac{\beta(t)\lambda^6+\gamma(t)}{1+\alpha(t)\lambda^6}\hat{u}(\lambda,t)=-\frac{G_5(t)}{1+\alpha(t)\lambda^6}-\frac{i\lambda G_4(t)}{1+\alpha(t)\lambda^6}+\frac{\lambda^2G_3(t)}{1+\alpha(t)\lambda^6}+\frac{G(\lambda,t)}{1+\alpha(t)\lambda^6}+\frac{\hat{f}(\lambda,t)}{1+\alpha(t)\lambda^6}.
$$

定义

$$\omega(\lambda,t)=\frac{\beta(t)\lambda^6+\gamma(t)}{1+\alpha(t)\lambda^6} \text{ and } \Omega(\lambda,t)=\int_{\tau=0}^{t}\omega(\lambda,\tau)d\tau=\int_{\tau=0}^{t}\frac{\beta(\tau)\lambda^6+\gamma(\tau)}{1+\alpha(\tau)\lambda^6}d\tau,$$

我们将 (9.3) 写成以下形式

$$\hat{u}(\lambda,t)=e^{-\Omega(\lambda,t)}\hat{u}_0(\lambda)-e^{-\Omega(\lambda,t)}\int_{\tau=0}^{t}\frac{e^{\Omega(\lambda,\tau)}}{1+\alpha(\tau)\lambda^6}G_5(\tau)\,d\tau-e^{-\Omega(\lambda,t)}\int_{\tau=0}^{t}\frac{i\lambda e^{\Omega(\lambda,\tau)}}{1+\alpha(\tau)\lambda^6}G_4(\tau)\,d\tau$$

$$+e^{-\Omega(\lambda,t)}\int_{\tau=0}^{t}\frac{\lambda^2e^{\Omega(\lambda,\tau)}}{1+\alpha(\tau)\lambda^6}G_3(\tau)\,d\tau+e^{-\Omega(\lambda,t)}\int_{\tau=0}^{t}\frac{e^{\Omega(\lambda,\tau)}}{1+\alpha(\tau)\lambda^6}G(\lambda,\tau)\,d\tau+e^{-\Omega(\lambda,t)}\int_{\tau=0}^{t}\frac{e^{\Omega(\lambda,\tau)}}{1+\alpha(\tau)\lambda^6}\hat{f}(\lambda,\tau)\,d\tau,$$

即,

$$(9.4)\quad \hat{u}(\lambda,t)=e^{-\Omega(\lambda,t)}\hat{u}_0(\lambda)-e^{-\Omega(\lambda,t)}\widetilde{G}_5(\lambda,t)-i\lambda e^{-\Omega(\lambda,t)}\widetilde{G}_4(\lambda,t)+\lambda^2e^{-\Omega(\lambda,t)}\widetilde{G}_3(\lambda,t)$$

$$+e^{-\Omega(\lambda,t)}\widetilde{G}(\lambda,t)+e^{-\Omega(\lambda,t)}\widetilde{\hat{f}}(\lambda,t), \text{ for } \lambda\in\mathbb{C} \text{ with } \operatorname{Im}\lambda\le 0,$$

where

$$\widetilde{G}_j(\lambda,t):=\int_{\tau=0}^{t}\frac{e^{\Omega(\lambda,\tau)}}{1+\alpha(\tau)\lambda^6}G_j(\tau)\,d\tau, \text{ for } j=5,4,3,$$

$$\widetilde{G}(\lambda,t):=\int_{\tau=0}^{t}\frac{e^{\Omega(\lambda,\tau)}}{1+\alpha(\tau)\lambda^6}G(\lambda,\tau)\,d\tau \text{ and } \widetilde{\hat{f}}(\lambda,t):=\int_{\tau=0}^{t}\frac{e^{\Omega(\lambda,\tau)}}{1+\alpha(\tau)\lambda^6}\hat{f}(\lambda,\tau)\,d\tau.$$

接下来，我们固定一个 $t>0$，并求出函数 $(1+\alpha\lambda^6)$ 的零点 $\lambda_k=\lambda_k(t)$, $k=1,2,3,4,5,6$：

$$\lambda_1=e^{i\pi/6}\sqrt[6]{\alpha(t)},\ \lambda_2=e^{i3\pi/6}\sqrt[6]{\alpha(t)},\ \lambda_3=e^{i5\pi/6}\sqrt[6]{\alpha(t)},$$

$$\lambda_4=-e^{i\pi/6}\sqrt[6]{\alpha(t)},\ \lambda_5=-e^{i3\pi/6}\sqrt[6]{\alpha(t)},\ \lambda_6=-e^{i5\pi/6}\sqrt[6]{\alpha(t)}.$$

我们还求解方程

$$\omega(\lambda,t)=\omega(\sigma(\lambda),t)\ \Leftrightarrow\ \frac{\beta(t)[\sigma(\lambda)]^6+\gamma(t)}{1+\alpha(t)[\sigma(\lambda)]^6}=\frac{\beta(t)\lambda^6+\gamma(t)}{1+\alpha(t)\lambda^6},$$

并且，为此，只需有 $[\sigma(\lambda)]^6=\lambda^6$，即，

$$\sigma_0(\lambda)=\lambda,\ \sigma_1(\lambda)=e^{i\pi/3}\lambda,\ \sigma_2(\lambda)=e^{i2\pi/3}\lambda,$$

$$\sigma_3(\lambda)=e^{i3\pi/3}\lambda=-\lambda,\ \sigma_4(\lambda)=e^{i4\pi/3}\lambda=-e^{i\pi/3}\lambda,\ \sigma_5(\lambda)=-e^{i2\pi/3}\lambda.$$

对于该构造而言，至关重要的是上述函数 $\sigma_m(\lambda)$ 满足以下方程:

$$\Omega(\lambda,t)=\Omega(\sigma_m(\lambda),t) \text{ and } \widetilde{G}_j(\lambda,t)=\widetilde{G}_j(\sigma_m(\lambda),t),\ j=5,4,3,\ m=0,1,2,3,4,5.$$

接下来，由 (9,4) 可 es
得

$$(9.6)\quad 2\pi u(x,t)=\int_{-\infty}^{\infty}e^{i\lambda x}\hat{u}(\lambda,t)d\lambda$$

$$=\int_{-\infty}^{\infty}e^{i\lambda x-\Omega(\lambda,t)}\hat{u}_0(\lambda)d\lambda-\int_{\partial\mathcal{A}_1+\partial\mathcal{A}_2+\partial\mathcal{A}_3}e^{i\lambda x-\Omega(\lambda,t)}\widetilde{G}_5(\lambda,t)d\lambda-\int_{\partial\mathcal{A}_1+\partial\mathcal{A}_2+\partial\mathcal{A}_3}i\lambda e^{i\lambda x-\Omega(\lambda,t)}\widetilde{G}_4(\lambda,t)d\lambda$$

$$+\int_{\partial\mathcal{A}_1+\partial\mathcal{A}_2+\partial\mathcal{A}_3}\lambda^2e^{i\lambda x-\Omega(\lambda,t)}\widetilde{G}_3(\lambda,t)d\lambda+\int_{\partial\mathcal{A}_1+\partial\mathcal{A}_2+\partial\mathcal{A}_3}e^{i\lambda x-\Omega(\lambda,t)}\widetilde{G}(\lambda,t)d\lambda+\int_{\partial\mathcal{A}_1+\partial\mathcal{A}_2+\partial\mathcal{A}_3}e^{i\lambda x-\Omega(\lambda,t)}\widetilde{\hat{f}}(\lambda,t)d\lambda,\ x>0,\ t>0,$$

其中 $\mathcal{A}_1,\mathcal{A}_2,\mathcal{A}_3$ 分别是半直线的充分小开邻域

$$[c_0 e^{i\pi/6}, +\infty e^{i\pi/6}) := \{\eta e^{i\pi/6} : \eta \geq c_0\},\ [c_0 e^{i3\pi/6}, +\infty e^{i3\pi/6}) := \{\eta e^{i3\pi/6} : \eta \geq c_0\} \text{ and}$$

$$[c_0 e^{i5\pi/6}, +\infty e^{i5\pi/6}) := \{\eta e^{i5\pi/6} : \eta \geq c_0\},$$

其边界 321 ,$\partial\mathcal{A}$ $\partial\mathcal{A}$ $\partial\mathcal{A}$ 光滑且方向为逆时针。（我们假设$_0$ = 1 $\sqrt[6]{\alpha}$ ≥ 0 >0 }:)(/inf{:*tt* *c* 。）

现在，我们需要计算 (9.6) 中积分的值，这些积分包含未知量),(~$_5$ λ ~$_4$ λ ~$_3$ λ),,(),,(*tGtGtG* ，并以数据表示。我们将通过求解三个代数方程组来完成这项工作——每个方程组分别针对 321 , , $\lambda \in \partial\mathcal{A}$ $\lambda \in \partial\mathcal{A}$ $\lambda \in \partial$ 求解。因此，对于 $\lambda \in \partial\mathcal{A}$ ，根据 (9.4)，有:

$$\hat{u}(-\lambda,t) = e^{-\Omega(\lambda,t)}\hat{u}_0(-\lambda) - e^{-\Omega(\lambda,t)}\widetilde{G}_5(\lambda,t) + i\lambda e^{-\Omega(\lambda,t)}\widetilde{G}_4(\lambda,t) + \lambda^2 e^{-\Omega(\lambda,t)}\widetilde{G}_3(\lambda,t) + e^{-\Omega(\lambda,t)}\widetilde{G}(-\lambda,t) + e^{-\Omega(\lambda,t)}\widetilde{\hat{f}}(-\lambda,t), \tag{9.7}$$

$$\hat{u}(\sigma_4(\lambda),t) = e^{-\Omega(\lambda,t)}\hat{u}_0(\sigma_4(\lambda)) - e^{-\Omega(\lambda,t)}\widetilde{G}_5(\lambda,t) - i\sigma_4(\lambda)e^{-\Omega(\lambda,t)}\widetilde{G}_4(\lambda,t) + [\sigma_4(\lambda)]^2 e^{-\Omega(\lambda,t)}\widetilde{G}_3(\lambda,t) + e^{-\Omega(\lambda,t)}\widetilde{G}(\sigma_4(\lambda),t) + e^{-\Omega(\lambda,t)}\widetilde{\hat{f}}(\sigma_4(\lambda),t), \tag{9.8}$$

(9.9)),(~)σ$_5$ λ = $^{-\Omega\ \lambda}$ $_0$ σ$_5$ λ − $^{-\Omega\ \lambda}$ $_5$ λ − σ$_5$ λ $^{-\Omega\ \lambda}$ $_4$ λ +[σ$_5$ λ]^2 $^{-\Omega\ \lambda}$ $_3$ λ (),(~)(),(~))((ˆ))),((ˆ),(),(),( ),(*tGe* *tGeitGeuetu* *t t t t*

ˆ))),((~ $_5$ $_5$),( ),(*t* ~ *fetG*))),(($_t$ $_t$ + $^{-\Omega\ \lambda}$ σ λ + $^{-\Omega\ \lambda}$ σ λ .

接下来，我们求解上述方程组，求出未知量

$$e^{-\Omega(\lambda,t)}\widetilde{G}_5(\lambda,t),\ e^{-\Omega(\lambda,t)}\widetilde{G}_4(\lambda,t),\ e^{-\Omega(\lambda,t)}\widetilde{G}_3(\lambda,t), \text{ for } \lambda \in \partial\mathcal{A}_1. \tag{9.10}$$

确保未知量的行列式 (9.10) 不为零至关重要。事实上，

$$\det\begin{bmatrix} -1 & i\lambda & \lambda^2 \\ -1 & -i\sigma_4(\lambda) & [\sigma_4(\lambda)]^2 \\ -1 & -i\sigma_5(\lambda) & [\sigma_5(\lambda)]^2 \end{bmatrix} \neq 0,$$

因为数值 1 $^{-\pi\ 3}$ $^{-2\pi\ 3}$ / / , ,$_i$ $_i$ *ee* 是六个不同的6th 单位根中的三个。

同样，对于未知量，我们写出与 (9.7)、(9.8) 和 (9.9) 类似的方程组， s

$$e^{-\Omega(\lambda,t)}\widetilde{G}_5(\lambda,t),\ e^{-\Omega(\lambda,t)}\widetilde{G}_4(\lambda,t),\ e^{-\Omega(\lambda,t)}\widetilde{G}_3(\lambda,t), \text{ for } \lambda \in \partial\mathcal{A}_2, \tag{9.11}$$

and

$$e^{-\Omega(\lambda,t)}\widetilde{G}_5(\lambda,t),\ e^{-\Omega(\lambda,t)}\widetilde{G}_4(\lambda,t),\ e^{-\Omega(\lambda,t)}\widetilde{G}_3(\lambda,t), \text{ for } \lambda \in \partial\mathcal{A}_3, \tag{9.10}$$

并求解它们。

最后，将 (9.10)、(9.11) 和 (9.12) 的值代入 (9.6)，我们便得到以数据表示的解),(*txu* 的积分表示。像往常一样，至关重要的是要确保在进行此代入时，(9.6) 中出现且包含未知量),(ˆ *tu* −λ 、)),((ˆ 4 *tu* σ λ 、)),((ˆ 5 *tu* σ λ 的积分均为零。

10. 算子)()()∂ + −1 ν α ∂ ν∂ + −1 ν β ∂ ν +γ ()()(
2 2 t t tx txt

问题***9*** 求解

$$(10.1)\qquad \begin{cases} \partial_t u = -(-1)^{\nu}\alpha(t)\partial_x^{2\nu}\partial_t u - (-1)^{\nu}\beta(t)\partial_x^{2\nu}u - \gamma(t)u + f(x,t),\ (x,t)\in\mathbb{R}^+\times\mathbb{R}^+, \\ u(x,0) = u_0(x),\ x\in\mathbb{R}^+, \\ \partial_x^{j-1}u(0,t) = g_{j-1}(t),\ j = 1,2,...,\nu,\ t\in\mathbb{R}^+, \end{cases}$$

对于),(txu 。

解的构造概述 根据公式

$$\int_0^{\infty}\frac{\partial^{2\nu}u(x,t)}{\partial x^{2\nu}}e^{-i\lambda x}dx = -\sum_{k=1}^{2\nu}(i\lambda)^{k-1}g_{2\nu-k}(t) + (i\lambda)^{2\nu}\hat{u}(\lambda,t),$$

其中

$$g_{2\nu-k}(t) = \left.\frac{\partial^{2\nu-k}u(x,t)}{\partial x^{2\nu}}\right|_{x=0},$$

以及先前分析的情形，即当 ν = 2 （在第2节）、ν = 4 （在第4节）和 ν = 6 （在第9节）时，(10.1) 中的微分方程得出

$$(10.2)\qquad \frac{\partial}{\partial t}[\hat{u}(\lambda,t)] + \frac{\beta(t)\lambda^{2\nu}+\gamma(t)}{1+\alpha(t)\lambda^{2\nu}}\hat{u}(\lambda,t)$$

$$= -\frac{\alpha(t)}{1+\alpha(t)\lambda^{2\nu}}\sum_{k=1}^{2\nu}(i\lambda)^{k-1}g'_{2\nu-k}(t) - \frac{\beta(t)}{1+\alpha(t)\lambda^{2\nu}}\sum_{k=1}^{2\nu}(i\lambda)^{k-1}g_{2\nu-k}(t) + \frac{\hat{f}(\lambda,t)}{1+\alpha(t)\lambda^{6}}$$

$$= -\frac{1}{1+\alpha(t)\lambda^{2\nu}}\sum_{k=1}^{2\nu}(i\lambda)^{k-1}[\alpha(t)g'_{2\nu-k}(t) + \beta(t)g_{2\nu-k}(t)] + \frac{\hat{f}(\lambda,t)}{1+\alpha(t)\lambda^{6}}.$$

定义 g

$$\Omega(\tau) = \int_{\tau=0}^{t}\frac{\beta(\tau)\lambda^{2\nu}+\gamma(\tau)}{1+\alpha(\tau)\lambda^{2\nu}}d\tau,$$

$$G_{2\nu-k}(t) = \alpha(t)g'_{2\nu-k}(t) + \beta(t)g_{2\nu-k}(t), \text{ for } k = 1,2,...,\nu,$$

and

$$G(\lambda,t) = -\sum_{k=\nu+1}^{2\nu}(i\lambda)^{k-1}[\alpha(t)g'_{2\nu-k}(t) + \beta(t)g_{2\nu-k}(t)],$$

根据 (10.2)，对于 λ ∈ ℂ 且 0Im λ ≤ ，我们得到：

$$(10.3)\qquad \hat{u}(\lambda,t) = e^{-\Omega(\lambda,t)}\hat{u}_0(\lambda) - \sum_{k=1}^{\nu}(i\lambda)^{k-1}e^{-\Omega(\lambda,t)}\widetilde{G}_{2\nu-k}(\lambda,t) + e^{-\Omega(\lambda,t)}\widetilde{G}(\lambda,t) + e^{-\Omega(\lambda,t)}\widetilde{\hat{f}}(\lambda,t),$$

其中我们设定

$$\widetilde{G}_{2\nu-k}(\lambda,t) := \int_{\tau=0}^{t}\frac{e^{\Omega(\lambda,\tau)}}{1+\alpha(\tau)\lambda^{2\nu}}G_{2\nu-k}(\tau)\,d\tau, \text{ for } k = 1,2,...,\nu,$$

$$\widetilde{G}(\lambda,t) := \int_{\tau=0}^{t}\frac{e^{\Omega(\lambda,\tau)}}{1+\alpha(\tau)\lambda^{2\nu}}G(\lambda,\tau)\,d\tau \text{ and } \widetilde{\hat{f}}(\lambda,t) := \int_{\tau=0}^{t}\frac{e^{\Omega(\lambda,\tau)}}{1+\alpha(\tau)\lambda^{2\nu}}\hat{f}(\lambda,\tau)\,d\tau.$$

接下来，我们固定一个 $>0t$ ，并求出函数 $\alpha \quad \lambda^{2\nu})(1\ t+$ 的零点 $)(t\lambda_j=\lambda_j,\ 1\leq \ \leq\nu\ ,j,$ 这些零点位于上半平面。在这种情况下，数 $)(t_j \quad _j \quad -\lambda \ =-\lambda\ ,\ 1\leq \ \leq\nu\ ,j$ 是 $+\alpha \quad \lambda^{2\nu}\ )(1\ t$ 在下半平面的零点。然后，(10.3) 得出以下表示公式：

$$(10.4)\quad 2\pi u(x,t)=\sum_{j=1}^{\nu}\int_{\mathcal{A}_j}e^{i\lambda x-\Omega(\lambda,t)}\hat{u}_0(\lambda)d\lambda-\sum_{\kappa=1}^{\nu}\sum_{j=1}^{\nu}\int_{\mathcal{A}_j}(i\lambda)^{k-1}e^{i\lambda x-\Omega(\lambda,t)}\widetilde{G}_{2\nu-k}(\lambda,t)d\lambda$$
$$+\sum_{k=1}^{\nu}\sum_{j=1}^{\nu}\int_{\mathcal{A}_j}e^{i\lambda x-\Omega(\lambda,t)}\widetilde{G}(\lambda,t)d\lambda+\sum_{k=1}^{\nu}\sum_{j=1}^{\nu}\int_{\mathcal{A}_j}e^{i\lambda x-\Omega(\lambda,t)}\widetilde{\widetilde{f}}(\lambda,t)d\lambda\ ,\ x>0\ ,\ t>0\ ,$$

其中，$\mathcal{A}_1\ \mathcal{A}_2 \quad \mathcal{A}_\nu$ ...,,, 是半直线的足够小且适当选取的开邻域

$$[c_0e^{i\pi[1+2(j-1)]/2\nu}\ ,+\infty e^{i\pi[1+2(j-1)]/2\nu})\coloneqq\{\eta\,e^{i\pi[1+2(j-1)]/2\nu}\ :\eta\geq c_0\},\ 1\leq j\leq\nu\ ,$$

其边界 $\partial\mathcal{A}_1\ \partial\mathcal{A}_2 \quad \partial\mathcal{A}_\nu$ ...,,, 光滑且按逆时针方向定向。(我们假设$_0 = \quad 1\ \sqrt[2\nu]{\alpha} \quad \geq 0\ >0 \quad$ }:) (/inf{:$tt \quad \overline{\quad} \ c \quad$.)

最后，为了计算 (10.4) 中包含未知量的积分

$$e^{-\Omega(\lambda,t)}\widetilde{G}_{2\nu-k}(\lambda,t)\text{, for }\lambda\in\mathcal{A}_j\text{ with }1\leq j\leq\nu\text{ and for each }1\leq k\leq\nu\ ,$$

我们建立了 ν 组代数方程，每组包含 ν 个未知量，其中每组方程对应一个轮廓 $_j$；利用方程 (10.3) 及相应的对称关系，从而得到“典范”问题9的有效统一变换法解公式。

参考资料

[1] Showalter, R.（1969）。Sobolev-Galpern 型偏微分方程。*Pacific J. Math.* 31(3), 787-793。[2] Fokas, A.S.（2002）。演化偏微分方程的新变换方法。*IMA J. Appl. Math.* 67, 559-590。[3] A. S. Fokas, “从 Green 到 Lax：经由 Fourier”，载于：《非线性偏微分方程及其应用新进展》，《应用数学专题论文集》 65（献给 P.D. Lax 和 L. Nirenberg），美国数学学会（2007）；[4]Fokas, A.S. “《边值问题的统一方法》”，CBMS-NSF 应用数学丛书 78，SIAM（2008）。[5] A. S. Fokas，“Lax 对：一种新型的可分离性”（特邀论文），《反问题》 25, 1-44（2009）。[6] A. S. Fokas, E. A. Spence，变量的综合，而非分离，《*SIAM*评论》 54（2012）。[7] B. Deconinck, T. Trogdon, V. Vasan，Fokas 方法求解线性偏微分方程，《*SIAM*评论》 56, 159-86（2014）。[8] A.S. Fokas, E. Kaxiras，《计算科学与工程的现代数学方法》，世界科学出版社（2023）。[9] A Chatziafratis, AS Fokas, K Kalimeris，演化偏微分方程的 Fokas 方法，《偏微分方程与应用》 14（2025）。[10] Kalimeris, K., Özsarı, T.（2025）。具有时变系数的线性对流扩散方程的 Fokas 方法及其向其他演化方程的推广。预印本 arXiv:2510.18100v1 [math.AP]。[11] Fokas, A. S.（2004）。具有变系数的线性偏微分方程的边值问题。《伦敦皇家学会会刊。*A*辑：数学、物理与工程科学》，*460*（2044），1131-1151。[12] Treharne, P. A., & Fokas, A. S.（2007年7月）。具有变系数的线性偏微分方程的初边值问题。载于《剑桥哲学学会数学会刊》（第143卷，第1期，第221-242页）。剑桥大学出版社。[13] Colbrook, M. J.（2020）。推广统一变换：曲线多边形与变系数偏微分方程。《*IMA*数值分析杂志》，*40*（2），976-1004。[14] Deconinck, B., & Farkas, M.（2025）。通过 Fokas 方法研究变系数演化问题 第一部分：耗散情形。《应用数学研究》，154（1），e12800。

[15] Milne, E. A.（1926）气体中受限辐射的扩散。《伦敦数学学会杂志》，s1-1：40–51。[16] Barenblatt, G. I., Zheltov, Iu. P., Kochina, I. N.（1960）裂隙岩石（地层）中均质液体渗流理论的基本概念。《应用数学与力学杂志》，24：1286–1303。[17] Coleman, B. D., Noll, W.（1960）泛函的逼近定理及其在连续介质力学中的应用。《理性力学与分析档案》，6：355–370。[18] Ting, T. W.（1963）二阶流体的某些非定常流。《理性力学与分析档案》，14：1–26。[19] Showalter, R. E., Ting, T. W.（1970）伪抛物型偏微分方程。《SIAM数学分析杂志》，1：1–26。[20] Puri, P.（1984）Rivlin-Ericksen 流体中平板的冲击运动。《流变学学报》，23：451–453。[21] Chen, P. J., Gurtin, M. E.（1968）关于涉及双温度的热传导理论。《应用数学与物理杂志》，19：614–627。[22] D. W. Taylor，《黏土固结研究》，麻省理工学院出版社，剑桥，1942。[23] D.E. Amos，修正热方程的半空间解，《应用数学季刊》28(3)，359-369（1969）。[24] R. E. Showalter, T.W. Ting，伪抛物型偏微分方程解的渐近行为，《纯粹与应用数学年鉴》90，241-258（1971）。[25] D. Colton，单空间变量中的伪抛物方程，《微分方程杂志》12(3)，559-565（1972）。[26] V. R. Gopala Rao, T.W. Ting，全空间中的伪热方程解，《理性力学与分析档案》49（1972）。[27] T. W. Ting，根据双温度热传导理论的冷却过程，《数学分析与应用杂志》45，23-31（1974）。[28] W. Rundell，伪抛物方程柯西问题的唯一性类，《美国数学学会会刊》76（1979）。[29] E. di Benedetto, M. Pierre，关于伪抛物方程的最大值原理，《印第安纳大学数学杂志》30，821（1980）。[30] L.W. White，伪抛物边界控制问题的可控性，《SIAM控制与优化杂志》18（1980）。[31] J. R. Cannon, Y. Lin，具有典型边界数据的一维伪抛物方程的经典解与弱解，《纯粹与应用数学年鉴》152，375-385（1987）。[32] A Quarteroni，伪抛物方程的傅里叶谱方法，《SIAM数值分析杂志》24(2)，323-335（1987）。[33] Chatziafratis, A., Fokas, A.S., Aifantis, E.C.（2024）。通过 Fokas 方法研究半直线上的 Barenblatt 伪抛物方程及其强迫项。《应用数学与力学杂志》104(3)，e202300614。[34] A. Chatziafratis, Tohru Ozawa，Sobolev 型演化偏微分方程的新不稳定性、爆破解与崩溃效应：四分之一平面上著名伪抛物模型的渐近分析。《偏微分方程与应用》5(5)，30（2024）。[35] A. Chatziafratis, E.C. Aifantis，Sobolev-Barenblatt 伪抛物模型及半带状区域上的 Rubinshtein-Aifantis 双扩散系统的显式 Ehrenpreis-Palamodov-Fokas 表示，《洛巴切夫斯基数学杂志》46（2025）。